English

HP Jet Fusion 4200 3D Printing Solution

User Guide

English

© Copyright 2017, 2018, 2019 HP Development Company, L.P.

Edition 5

Legal notices

The information contained herein is subject to change without notice.

The only warranties for HP products and services are set forth in the express warranty statement accompanying such products and services. Nothing herein should be construed as constituting an additional warranty. HP shall not be liable for technical or editorial errors or omissions contained herein.

Safety notice

Read and follow the operating and safety instructions before turning on the equipment.

Trademarks

Intel® and Intel Core™ are trademarks of Intel Corporation in the U.S. and other countries.

Microsoft® and Windows® are U.S. registered trademarks of Microsoft Corporation.

All products and company names are registered trademarks of their original owners. The use of any trademark is for identification and reference purposes only and does not imply any association between HP and the trademark owner or product brand.

English

Table of contents

1 Welcome to your MJF system 1
Documentation 2
Product usage requirements 3
MJF technology 3
Usage recommendations 4
Time scheduling 5

2 Safety precautions 6
Introduction 7
General safety guidelines 7
Final parts/builds 8
Explosion hazard 8
Electrical shock hazard 9
Heat hazard 10
Fire hazard 10
Mechanical hazard 11
Light radiation hazard 11
Chemical hazard 11
Ventilation 11
Air conditioning 12
Sound pressure level 12
Build unit transport hazard 12
3D part unpacking 12
Personal protective equipment 13
Use of tools 13
Warnings and cautions 13
Warning labels 13
Emergency stop buttons 16

3 Main components 17
Printer 18
Processing station 19
Build unit 21
Front panel 22

Set the administrator password 25
Software 25

4 Power on and off 31
Turn the printer on and off 32
Turn the processing station on and off 33
Circuit-breaker labels 34

5 Printer and processing station networking 35
Configuration 35
Troubleshooting 36

6 Supplies 37
Printer 38
Processing station 50
How to recycle supplies 64

7 Design and printing guidelines 65
Introduction 66
File preparation 66
Minimum specification for parts 70

8 Load material into the build unit 71
Loading procedure 72
Change to a different type of material 75

9 Print 81
Job list app 82
Send a job to be printed 82
Select a job to be printed 82
Add job while printing (4210 only) 82
Cancel a job 83
Check status on the front panel 84
Check status remotely 84
Possible errors while printing 84
Print modes 85

10 Unpack the build 86

11 Part cleaning and postprocessing 92

12 Hardware maintenance 93
Safety precautions 93
General cleaning instructions 94
Maintenance resources 94
Printer maintenance 101
Processing-station maintenance 187
Build-unit maintenance 208
Move or store the product 223

13 Print-quality optimization 224
General advice 225
Printhead health troubleshooting 225
Airflow check 237
Fusing-lamp calibration 237

14 Ordering information 239

15 System errors 240
Introduction 241
0085-0008-0X94 Carriage – Printhead – Temperature extremely high 241
0085-0008-0X86 Carriage – Printhead – Temperature too high 241
0085-0008-0X95 Carriage – Printhead – Temperature extremely low 242
0085-0008-0X87 Carriage – Printhead – Temperature too low 242
0085-0008-0X82 Carriage – Printhead – Data not responding 242
0085-0008-0X98 Carriage – Printhead – Transmit error 242
0085-0008-0X96 Carriage – Printhead – Energy calibration failure 243
0085-0008-0X93 Carriage – Printhead – Fails continuity 243
0085-0008-0X85 Carriage – Printhead – Fails logical 243
0085-0008-0X10 Carriage – Printhead – Voltage out of range 243
0085-0013-0X01 Carriage – Primer – Malfunction 244
0085-0013-0X33 Carriage – Primer – Current too high 244
0085-0013-0X41 Carriage – Primer – Leakage 244

16 When you need help 246
Request support 246
Customer Self-Repair 246
Service information 246

17 Accessibility 247
Front panel 247

Index 248

English

1 Welcome to your MJF system

- Documentation
- Product usage requirements
- MJF technology
- Usage recommendations
- Time scheduling

English

Documentation

The following documents are available:

- Site preparation guide
- Introduction information
- User guide (this document)
- Videos supplementing the user guide
- Legal information
- Limited warranty
- HP SmartStream 3D Build Manager User Guide

These documents can be downloaded from the appropriate webpage:

- http://www.hp.com/go/jetfusion3D4200/manuals
- http://www.hp.com/go/jetfusion3D4210/manuals

Product usage requirements

The products, services, and consumables are subject to the following additional terms:

The customer agrees to use only HP Branded Consumables and HP Certified Materials in the 3D HP printer product, and understands that use of any consumables other than HP consumables may cause serious product functionality and/or safety issues, including but not limited to those outlined in the user guide. The customer agrees not to use the product and/or consumables for uses not permitted by US, EU, and/or other applicable law.

The customer agrees not to use the product and/or consumables for the development, design, manufacture, or production of nuclear weapons, missiles, chemical or biological weapons, and/or explosives of any kind.

The customer agrees to comply with the connectivity requirement outlined below.

The customer may use firmware embedded in the product only to enable the product to function in accordance with its published specifications.

The customer agrees to comply with the user guide.

Products, services, and/or technical data provided under these terms are for the customer's internal use and not intended for further resale.

MJF technology

HP Multi Jet Fusion technology offers speed advantages and control over part and material properties beyond those found in other 3D printing processes.

HP Multi Jet Fusion technology starts by laying down a thin layer of material in the working area. Next, the carriage containing an HP Thermal Inkjet array passes from left to right, printing chemical agents across the full working area. The layering and energy processes are combined in a continuous pass of the second carriage from top to bottom. The process continues, layer-by-layer, until a complete part is formed. At each layer, the carriages change direction for optimum productivity.

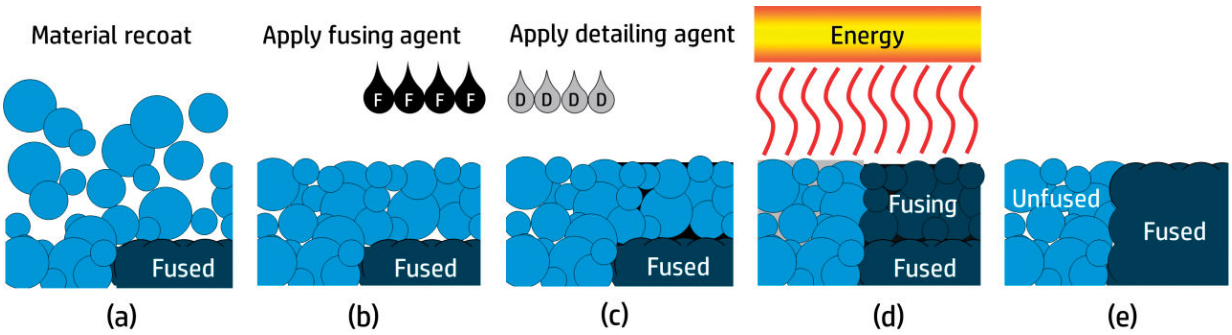

a. The material is recoated across the work area.

b. A fusing agent (F) is selectively applied where the particles are to fuse together.

c. A detailing agent (D) is selectively applied where the fusing action needs to be reduced or amplified. In this example, the detailing agent reduces fusing at the boundary to produce a part with sharp and smooth edges.

d. The work area is exposed to fusing energy.

e. The part now consists of fused and unfused areas.

The process is repeated until the complete part has been formed.

NOTE: The sequence of steps above is typical, but may be changed in specific hardware implementations.

HP Multi Jet Fusion technology can realize the full potential of 3D printing through the production of highly functional parts. Using HP Thermal Inkjet arrays, HP Multi Jet Fusion technology is built on HP's technical core

competency of rapidly and accurately placing precise (and minute) quantities of multiple types of fluids. This gives HP Multi Jet Fusion technology a versatility and potential not found in other 3D printing technologies.

In addition to fusing and detailing agents, HP Multi Jet Fusion technology can employ additional agents to transform properties at each volumetric pixel (or voxel). These agents, transforming agents, deposited point-by-point across each cross-section, allow HP Multi Jet Fusion technology to produce parts that cannot be made by other methods.

For example, taking advantage of HP's in-depth knowledge of color science, HP Multi Jet Fusion printers could selectively print a different color at each voxel with agents containing cyan, magenta, yellow, or black (CMYK) colorants.

The long-term vision for HP Multi Jet Fusion technology is to create parts with controllably variable—even quite different—mechanical and physical properties within a single part or among separate parts processed simultaneously in the working area. This is accomplished by controlling the interaction of the fusing and detailing agents with each other, with the material to be fused, and with additional transforming agents.

HP Multi Jet Fusion technology can provide design and manufacturing possibilities that surpass the limits of our imagination. That's what technological breakthroughs do.

Usage recommendations

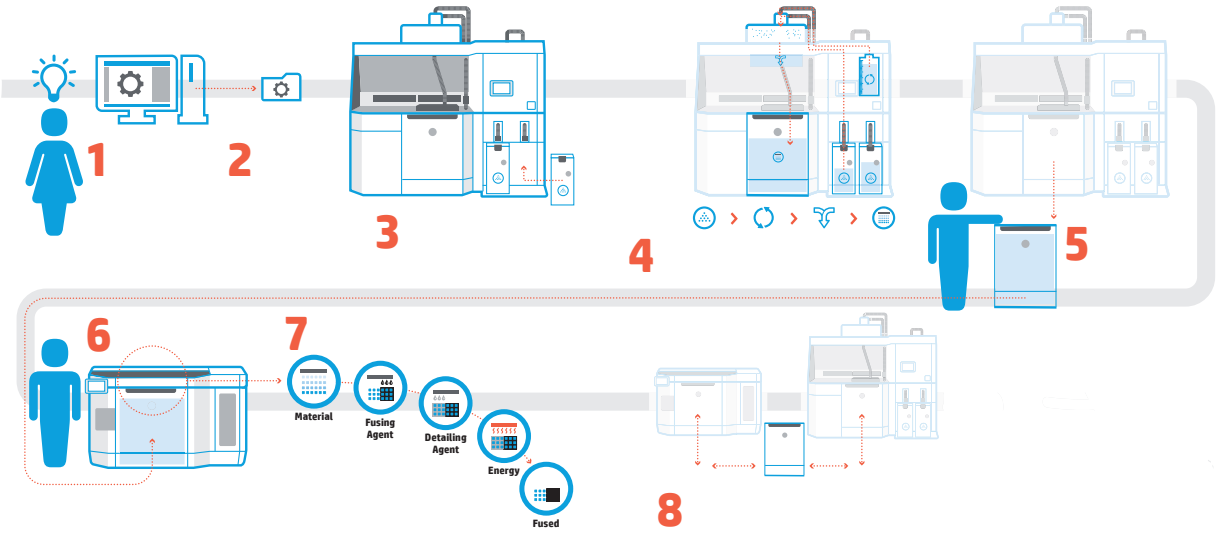

1. **Prepare your design for printing:** Open your 3D model and check for errors with easy-to-use HP software.
2. **Pack models and send to printer:** Place multiple models into the software and submit the job to the printer.
3. **Add materials:** Insert the material cartridges into the processing station.
4. **Automated mixing:** You will have a clean loading and mixing experience because the processing station is enclosed and automated. Materials are loaded into the build unit.
5. **Remove the build unit from the processing station.**
6. **Slide the build unit into the printer.**
7. **Printing with voxel-level control:** Just tap **Start** to get extreme dimensional accuracy and fine detail, thanks to HP's unique multi-agent printing process.
8. **Streamlined workflow:** The build unit can be removed from the printer—which is now ready for the next build—and slid back into the processing station.

Time scheduling

Take into account printing and cooling times when scheduling your prints. Printing and cooling times vary depending on your part size and number of parts in each print. As a general guide, expect around 16 hours of printing and 46 hours of cooling for a full build chamber.

	Printing time		Safety cooling time	Natural cooling time		Fast cooling time *
Build chamber	Fast print mode	Default/Strength print mode		Normal	Minimum *	(in systems with fast cooling integrated)
100% full	10 h	16 h 20 min	20–30 min	46 h	31 h	10 h
75% full	7 h 30 min	12 h 15 min	20–30 min	35 h	23 h	8 h
50% full	5 h	8 h 10 min	20–30 min	23 h	16 h	6.5 h
25% full	2 h 30 min	4 h	20–30 min	12 h	8 h	5 h

WARNING! * You will need heat-resistant gloves and goggles for unpacking.

NOTE: Cooling times are approximate and may vary depending on the complexity of the build.

TIP: If you print small parts, consider printing them in small batches and having an extra build unit in order to print continuously.

English

2 Safety precautions

- Introduction
- General safety guidelines
- Final parts/builds
- Explosion hazard
- Electrical shock hazard
- Heat hazard
- Fire hazard
- Mechanical hazard
- Light radiation hazard
- Chemical hazard
- Ventilation
- Air conditioning
- Sound pressure level
- Build unit transport hazard
- 3D part unpacking
- Personal protective equipment
- Use of tools
- Warnings and cautions
- Warning labels
- Emergency stop buttons

Introduction

Before using the equipment, read the following safety precautions and operating instructions to make sure you can use it safely.

You are expected to have the appropriate technical training and experience necessary to be aware of hazards to which you may be exposed in performing a task, and to take appropriate measures to minimize the risks to yourself and to others.

Perform the recommended maintenance and cleaning tasks to ensure the correct and safe operation of the equipment.

Operations must be supervised at all times.

The equipment is stationary, and should be located in a restricted-access area, for authorized personnel only.

General safety guidelines

Turn off all equipment, using the branch circuit breakers located in the building's Power Distribution Unit (PDU), and call your service representative (see When you need help on page 246) in any of the following cases:

- The power cord is damaged.
- The top heating and fusing lamp enclosures are damaged, the glass is missing or broken, or the sealing is defective.
- The equipment has been damaged by an impact.
- Liquid has entered the equipment.
- There is smoke or an unusual smell coming from the equipment.
- The built-in Residual Current Circuit Breaker (Ground Fault Circuit Interrupter) has been repeatedly tripped.
- Fuses have blown.
- The equipment is not operating normally.
- There is any mechanical or enclosure damage.

Turn off the equipment using the branch circuit breakers in either of the following cases:

- During a thunderstorm
- During a power failure

Operate the equipment only within the specified ranges of operating temperature and humidity. See the site preparation guide, which can be downloaded from:

- http://www.hp.com/go/jetfusion3D4200/manuals
- http://www.hp.com/go/jetfusion3D4210/manuals

The printer, build unit, and processing station should always be kept in the same environmental conditions.

The print-production area in which the equipment is installed should be free from liquid spillage and environmental condensation.

Ensure that there is no condensation inside the equipment before turning it on.

Take special care with zones marked with warning labels.

Use HP-certified and HP-branded material and agents only. Do not use unauthorized third-party material or agents.

Use HP-certified external tanks only. The use of third-party external tanks can cause safety risks, material leakages, and malfunctions in the processing station; and may affect your system warranty.

In case of unexpected malfunction, anomaly, ESD (ElectroStatic Discharges), or electromagnetic interference, press the emergency stop button and disconnect the equipment. If the problem persists, contact your support representative.

Do not repair or replace any part of the printer or attempt any servicing unless specifically recommended in the user-maintenance instructions or in published user repair instructions that you understand and have the skills to carry out.

Do not attempt to repair, disassemble, or modify the device yourself.

Do not use any part other than original HP Spare Parts.

For repairing or reinstalling the device please contact your nearest service authorized provider.

Failing to do so may result in electric shock, fire, problems with the product, or injury.

Final parts/builds

The customer assumes all risk relating to or arising from the 3D printed parts.

The customer is solely responsible for the evaluation of and determination of the suitability and compliance with applicable regulations of the products and/or 3D printed parts for any use, especially for uses (including but not limited to medical/dental, food contact, automotive, heavy industry, and consumer products) that are regulated by US, EU, and other applicable governments.

Explosion hazard

⚠ WARNING! Dust clouds can form explosive mixtures with air. Take precautionary measures against static charges, and keep away from sources of ignition.

NOTICE: The equipment is not intended for hazardous locations or ATEX classified zones: ordinary locations only.

To avoid the risk of explosion, take the following precautions:

- Smoking, candles, welding, and open flames should be forbidden close to the equipment or material storage area.
- Inside and outside the equipment should be cleaned regularly with an explosion-protected vacuum cleaner to avoid dust accumulation. Do not sweep the dust or or try to remove it with a compressed-air gun.
- An explosion-protected vacuum cleaner certified for collection of combustible dust is required for cleaning. Take measures to mitigate material spillage and avoid potential ignition sources such as ESD (ElectroStatic Discharges), flames, and sparks. Do not smoke nearby.
- The equipment and accessories must be properly grounded at mains outlets only; do not manipulate internal bonding. If static discharges or electrical sparks are noticed, stop operation, disconnect the equipment, and contact your support representative.
- Check the air filters and the sealing of the heating lamps regularly, as specified in Hardware maintenance on page 93. Do not remove filters or lamp glasses.
- Use HP-certified and HP-branded material and agents only. Do not use unauthorized third-party material or third-party agents.

- HP recommends the use of HP accessories for unpacking 3D parts and refilling the build chamber. If other methods are used, read the following notes:
  - Dust clouds generated during handling and/or storage can form explosive mixtures with air. Dust explosion characteristics vary with the particle size, particle shape, moisture content, contaminants, and other variables.
  - Check that all equipment is properly grounded and installed to satisfy electrical classification requirements. As with any dry material, pouring this material or allowing it to fall freely or be conveyed through chutes or pipes can accumulate and generate electrostatic sparks, potentially causing ignition of the material itself, or of any flammable materials which may come into contact with the material or its container.
- Material storage, handling, and disposal as per local laws. See the Safety Data Sheets at http://www.hp.com/go/msds for adequate handling and storage. Follow your Environmental, Health, and Safety processes and procedures.
- Do not place the equipment in a hazardous location area, keep separated from other equipment that could create a combustible dust cloud during its operation.
- Auxiliary post-processing equipment, as sand blasting, must be suitable for combustible dust.
- Stop operation immediately if sparks or material spillages are seen, and call your HP service representative before continuing.
- All personnel, when handling combustible dust, should be freed from static electricity by using conductive or dissipative footwear and clothing, and a conductive floor.

Additionally, for the 4210 processing station only:

- Use a bulk discharging system and drum rotator suitable for combustible dust and compatible with the material that you intend to use.
- Keep an area of at least 2 m (79 in) around the bulk discharging system clear of electric/electronic devices and any sources of ignition.
- Use rigid pipes and flexible hoses suitable for transporting combustible powder and properly earthed.
- Use static earthing clamps to connect a material loading tank when used as bulk material supply.

Electrical shock hazard

⚠ WARNING! The internal circuits inside the e-cabinet, top heating, fusing lamps, build unit, and processing station operate at hazardous voltages capable of causing death or serious personal injury.

Turn off the equipment using the branch circuit breakers located in the building's Power Distribution Unit (PDU) before servicing. The equipment must be connected to earth at mains outlets only.

To avoid the risk of electric shock:

- Do not attempt to dismantle the internal circuit enclosures, top heating, fusing lamps, build unit, processing station, or e-cabinet except during hardware maintenance tasks. In that case, follow the instructions strictly.
- Do not remove or open any other closed system covers or plugs.
- Do not insert objects through slots in the equipment.
- Test the functionality of the Residual Current Circuit Breaker (RCCB) every year (refer to the procedure below).

NOTE: A blown fuse may indicate malfunctioning electrical circuits within the system. Call your service representative (see When you need help on page 246), and do not attempt to replace the fuse yourself.

Heat hazard

The top heating, fusing, and build chamber subsystems of the printer operate at high temperatures and can cause burns if touched. To avoid personal injury, take the following precautions:

- Take special care when accessing the printing area. Let the printer cool down before you open the covers.
- Take special care with zones marked with warning labels.
- Do not place objects inside the equipment while operating.
- Do not cover enclosures while operating.
- Remember to let the equipment cool down before performing some maintenance operations.
- Wait for at least the minimum cooling time (see Unpack the build on page 86) before extracting the build unit from the printer after printing, or unpacking parts from the build unit.

Fire hazard

The top heating, fusing, and build chamber subsystems of the printer operate at high temperatures. Call your service representative if the built-in Residual Current Circuit Breaker (Ground Fault Circuit Interrupter) is repeatedly tripped.

To avoid the risk of fire, take the following precautions:

- Use the power supply voltage specified on the nameplate.
- Connect the power cord to a dedicated line, protected by a branch circuit breaker according to the information detailed in the site preparation guide.
- Do not insert objects through slots in the equipment.
- Take care not to spill liquid on the equipment. After cleaning, make sure all components are dry before using the equipment again.
- Do not use aerosol products that contain flammable gases inside or around the equipment. Do not operate the equipment in an explosive atmosphere.
- Do not block or cover the openings of the equipment.
- Do not attempt to modify the top heating, fusing, build chamber, e-cabinet, or enclosures.
- Proper maintenance and genuine HP consumables are required to ensure that the equipment operates safely as designed. The use of non-HP consumables may present a risk of fire.
- Take special care with zones marked with warning labels.
- Do not place objects covering top cover, enclosures, or air ventilation.
- Do not leave tools or other materials inside equipment after maintenance or servicing.

Suitable materials for fire-fighting include carbon dioxide, water spray, dry chemicals, or foam.

⚠ CAUTION: Do not use a jet of water, as it could scatter and spread the fire.

⚠ WARNING! Depending on the material used, some unhealthy substances can be released into the air in case of incidental fire. Wear self-contained pressure-demand breathing apparatus and full protective gear. Your EHS specialist should consult the Safety Data Sheet (SDS) about each material, available at http://www.hp.com/go/msds, and advice on the appropriate measures for your location.

Mechanical hazard

The equipment has moving parts that could cause injury. To avoid personal injury, take the following precautions when working close to the equipment.

- Keep your clothing and all parts of your body away from moving parts.
- Avoid wearing necklaces, bracelets, and other hanging objects.
- If your hair is long, try to secure it so that it will not fall into the equipment.
- Take care that sleeves or gloves do not get caught in moving parts.
- Avoid standing close to the fans, which could cause injury and could also affect print quality (by obstructing the air flow).
- Do not operate the equipment with covers bypassed.

Light radiation hazard

Infrared (IR) radiation is emitted from the top heating and fusing lamps. The enclosures limit radiation in compliance with the requirements of the exempt group of IEC 62471:2006, *Photobiological safety of lamps and lamp systems*. Do not modify the top cover enclosure, nor the glasses or windows.

Chemical hazard

See the Safety Data Sheets available at http://www.hp.com/go/msds to identify the chemical ingredients of your consumables (material and agents). Sufficient ventilation needs to be provided to ensure that potential airborne exposure to these substances is adequately controlled. Consult your usual air conditioning or EHS specialist for advice on the appropriate measures for your location.

Use HP-certified material and agents only. Do not use unauthorized third-party material or third-party agents.

Ventilation

Fresh air ventilation is needed to maintain comfort levels. For a more prescriptive approach to adequate ventilation, you could refer to the latest edition of the ANSI/ASHRAE (American Society of Heating, Refrigerating and Air-Conditioning Engineers) document *Ventilation for Acceptable Indoor Air Quality*.

Adequate ventilation needs to be provided to ensure that potential airborne exposure to materials and agents is adequately controlled according to their Safety Data Sheets.

Ventilation should meet local environmental, health, and safety (EHS) guidelines and regulations.

For the printer and processing station, follow the ventilation recommendations in the site preparation guide.

NOTE: The ventilation units should not blow air directly onto the equipment.

Air conditioning

As with all equipment installations, to maintain ambient comfort levels, air conditioning in the work area should take into account that the equipment produces heat. Typically, the printer's power dissipation is 9 kW to 11 kW (30.7 kBTU/h to 37.5 kBTU/h), and the processing station's power dissipation is 2.6 kW (8.8 kBTU/h).

Air conditioning should meet local environmental, health, and safety (EHS) guidelines and regulations.

NOTE: The air conditioning units should not blow air directly onto the equipment.

Sound pressure level

Printer and build unit

Declared dual number noise emission values in accordance with ISO 4871, corresponding to the worst bystander position according to ISO 11202, located at the rear of the printer:

- LpA = 78 dB(A), measured with the fans turning at maximum speed
- KpA = 4 dB(A)

Processing station and build unit

Declared dual number noise emission values in accordance with ISO 4871, corresponding to the microphone position located in the dedicated operator area in accordance with ISO 11202:

- LpA = 73 dB(A), measured during the unpacking process
- KpA = 4 dB(A)

Hearing protection may be required as per local laws; consult your EHS specialist.

Build unit transport hazard

Special care must be taken to avoid personal injury when moving the build unit.

- Always wear personal protective equipment including boots and gloves.
- Keep the safety lid on top of the build unit at all times, except when it is inside the printer or processing station.
- Steer the build unit using the handle only.
- Move the build unit over smooth, flat surfaces without steps.
- Move with care and avoid shocks during transport, which could spill the material.
- Lock the front casters when not moving the build unit. Remember to unlock them before moving it.

If moving the build unit between different rooms, bear in mind that it should be kept in constant environmental conditions.

3D part unpacking

Wear heat-resistant gloves when unpacking 3D printed parts.

Personal protective equipment

Heat-resistant gloves, masks, goggles, conductive or dissipative footwear, conductive or dissipative clothing, and hearing protection are recommended for certain maintenance tasks and material handling.

Use of tools

- **Users:** Daily operations including printer settings, printing, unpacking and refilling, replacement of agent reservoirs, and daily checks. No tool is required.
- **Maintenance personnel:** Hardware maintenance tasks and replacement of Customer Self-Replaceable (CSR) parts may require a screwdriver, as described in Hardware maintenance on page 93.

NOTE: During installation, the designated personnel receive training for the safe operation and maintenance of the equipment. The equipment should not be used without this training.

NOTE: After using the maintenance key to open a door, remember to lock it afterwards, and return the key to safe and secure storage.

Warnings and cautions

The following symbols are used in this manual to ensure the proper use of the equipment and to prevent it from being damaged. Follow the instructions marked with these symbols.

WARNING! Failure to follow the guidelines marked with this symbol could result in serious personal injury or death.

CAUTION: Failure to follow the guidelines marked with this symbol could result in minor personal injury or damage to the product.

Warning labels

Label	Explanation
 For service personnel only	**Electric shock hazard** Heating modules operate at hazardous voltage. Disconnect power source before servicing. CAUTION: Double pole. Neutral fusing. Refer servicing to qualified service personnel. In case of operation of the fuse, parts of the equipment that remain energized may represent a hazard during servicing. Before servicing, turn off the equipment using the Branch Circuit Breakers located in the building's Power Distribution Unit (PDU). WARNING! High leakage current. Current leakage may exceed 3.5 mA. Earth connection essential before connecting supply. Equipment to be connected to earthed mains only. See installation instructions before connecting to the supply. Ensure that the input voltage is within the equipment's rated voltage range. **Before starting** Read and follow the operating and safety instructions before starting the equipment.

Label	Explanation
	Risk of burns. Let the equipment cool down before accessing internal parts.
	You are recommended to wear gloves when handling material cartridges, agents, printheads, the printhead cleaning roll, and when performing maintenance cleaning tasks. You are recommended to wear heat-resistant gloves when unpacking parts in the processing station. The temperature can be higher than 80°C (176°F).
	You are recommended to wear a safety mask when replacing filters.
	You are recommended to wear safety goggles when replacing filters.
	Do not step over the support platform of the material cartridges.
	Do not climb onto the external tank, which could cause the processing station to fall over.
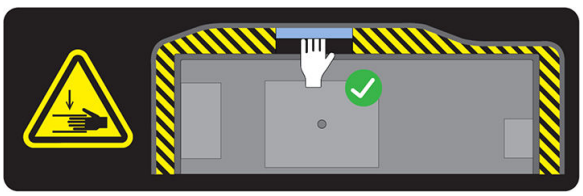	Crush hazard. Keep your hands clear of the edge of the top cover. Open and close the top cover using the handle (highlighted in blue) only.
	WARNING! Dust clouds can form explosive mixtures with air. Take precautionary measures against static charges, and keep away from sources of ignition. No smoking, matches, or open flames close to equipment or material storage area.

Label	Explanation
	An explosion-protected vacuum cleaner certified for collection of combustible dust is required for cleaning. Take measures to mitigate material spillage and avoid potential ignition sources such as ESD (ElectroStatic Discharges), flames, and sparks. Do not smoke nearby. Disposal as per local laws.
 For maintenance and service personnel only	Electric shock hazard. Disconnect power before servicing. Heating modules and electrical cabinets operate at hazardous voltage.
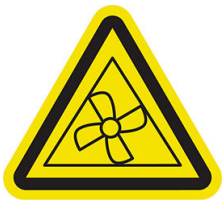 For maintenance and service personnel only	Hazardous moving parts. Keep away from moving fan blades.
 For maintenance and service personnel only	Risk of trapped fingers. Do not touch gears while moving: your hands may be trapped between the gearwheels.
 For service personnel only	Hazardous moving part. Keep away from the moving print carriage and cable/hose carriers. When printing, the print carriage travels back and forth.
	Identifies the Protective Earth (PE) terminal for qualified electricians, and bonding terminals for maintenance/service personnel only. An earth connection is essential before connecting to the supply.
	Do not disconnect the hoses during the purging process.

Emergency stop buttons

There is an emergency stop button on the printer and another on the processing station. If an emergency occurs, simply push the emergency stop button to stop all processes.

- In the case of the printer, the printer carriage, the recoater, the lamps, and the build unit are halted; the build-unit door and top cover are locked until the internal temperature decreases.
- In the case of the processing station, the vacuum system, the motors, and the build unit are halted.

A system error message is displayed, and the fans turn at maximum speed. Ensure that the emergency stop button is released before restarting the equipment.

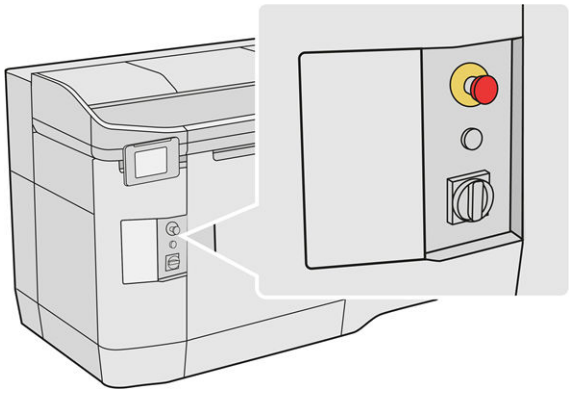

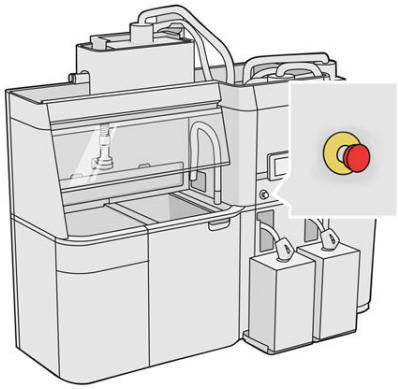

For safety reasons, access to the print zone is not permitted while printing is in progress. Let the printer cool down before touching anything inside it.

To stop the equipment completely, turn it off. See Turn the printer on and off on page 32 and Turn the processing station on and off on page 33.

3 Main components

- Printer
- Processing station
- Build unit
- Front panel
- Set the administrator password
- Software

Printer

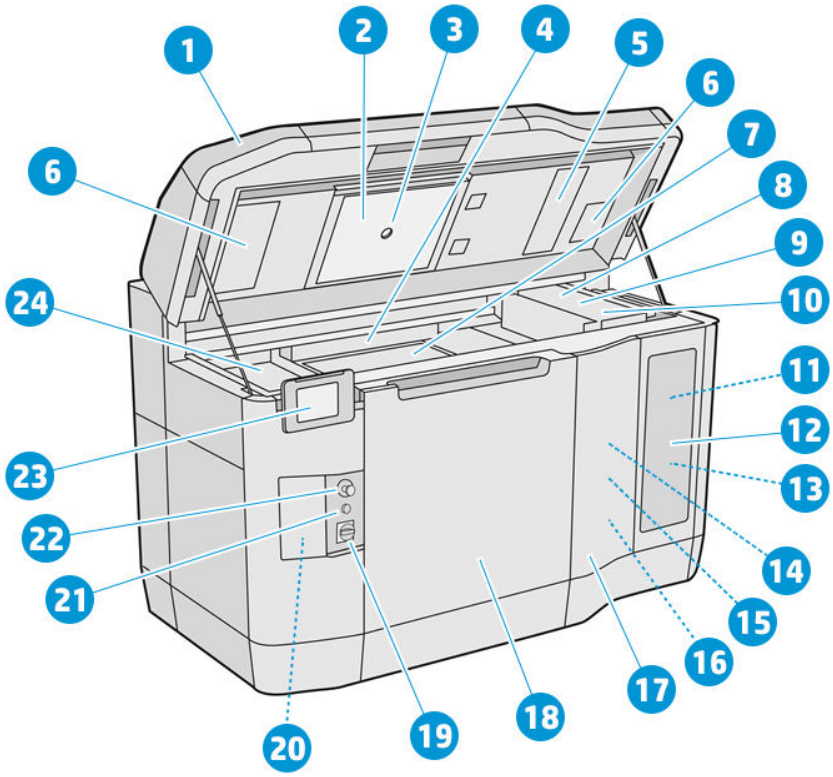

1. Top cover
2. Heating lamps
3. Temperature camera
4. Recoating unit and recoating roller
5. Heating-lamps filter
6. Top-enclosure filters
7. Print bed
8. Printhead
9. Fusing lamps
10. Print carriage
11. Fusing agent
12. Agent door
13. Detailing agent
14. Printhead cleaning roll
15. Internal cleaning-roll door
16. Cleaning-roll collector
17. External cleaning-roll door
18. Build-unit door

19. Main switch
20. Circuit breaker
21. Rearm button
22. Emergency stop button
23. Front panel
24. Print zone

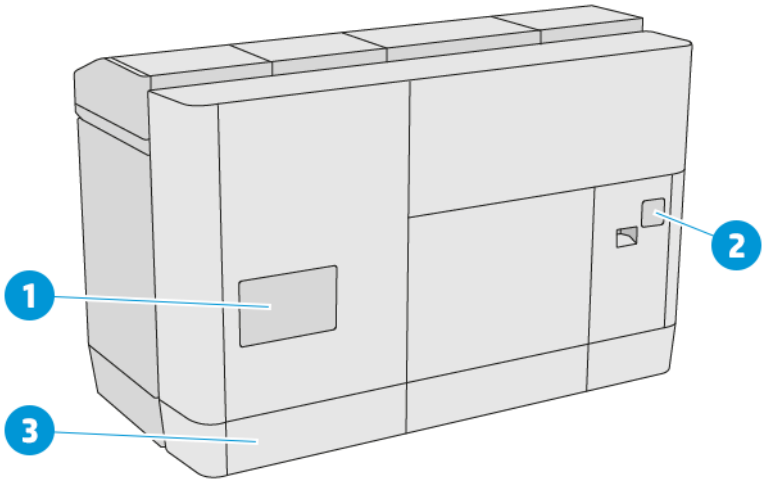

1. Print-zone filter
2. E-cabinet filter
3. Network and electrical connections

Processing station

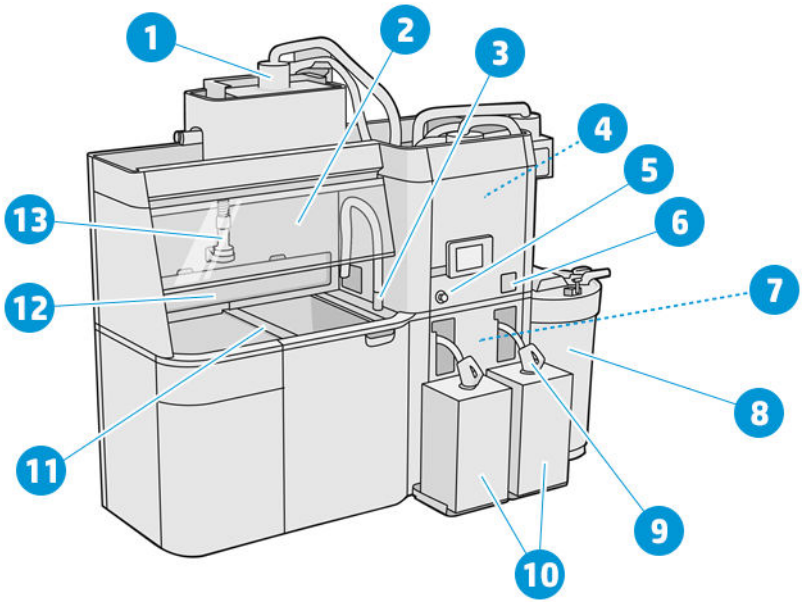

1. Mixer
2. Hood
3. Reusable material collector

4. Storage tank
5. Emergency stop button
6. Service switch
7. Sieve
8. External tank
9. Material cartridge connector
10. Material cartridges
11. Platform control buttons
12. Dust extractor
13. Material loading nozzle

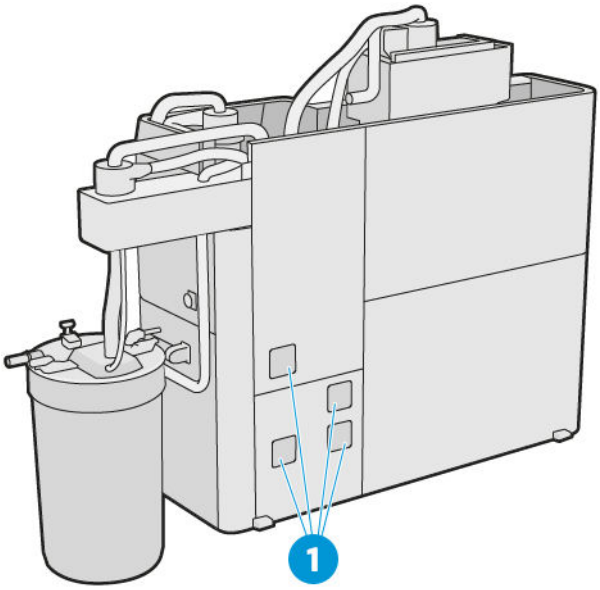

1. E-cabinet filters

Build unit

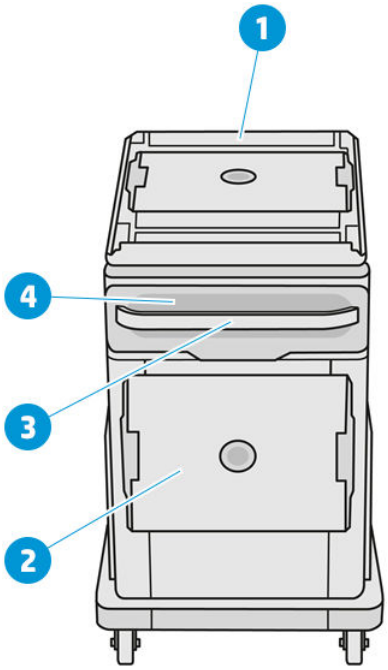

1. Material loading inlet
2. Safety lid
3. Handle

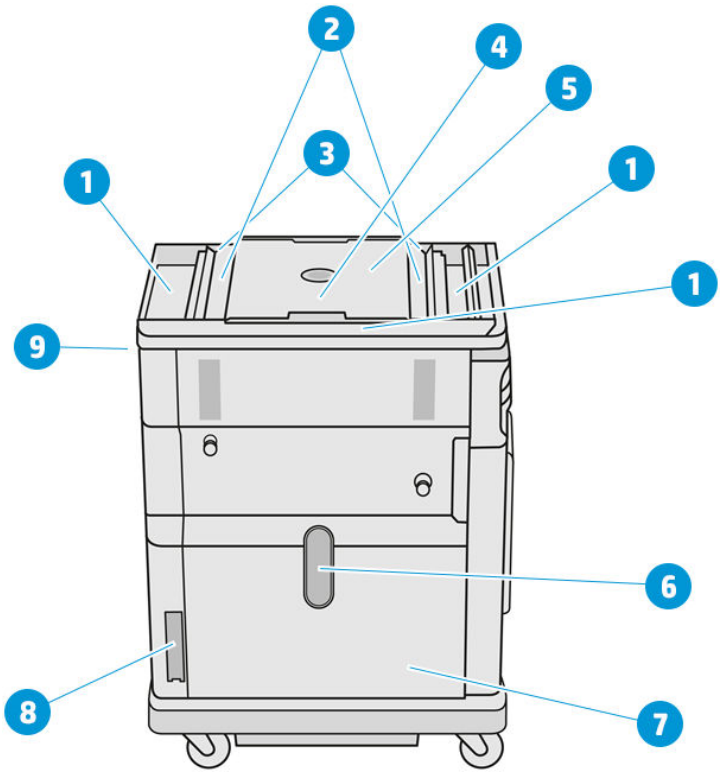

1. Overflow trays (4)
2. Feed trays (2)
3. Vane feeders (2)

4. Printing platform
5. Build chamber
6. Material window (some models do not have the window)
7. Material chamber
8. Material chamber filter
9. Build unit socket

Front panel

The front panel is a touch-sensitive screen with a graphical user interface. There is a front panel on the front left of the printer and another on the front right of the processing station. Each front panel is attached to a movable arm, allowing you to adjust it to a comfortable working position.

The front panel gives you complete control of your printer and processing station: from the front panel, you can view information about the device, change device settings, monitor device status, and perform tasks such as supplies replacement and calibrations. The front panel displays alerts (warning and error messages) when necessary.

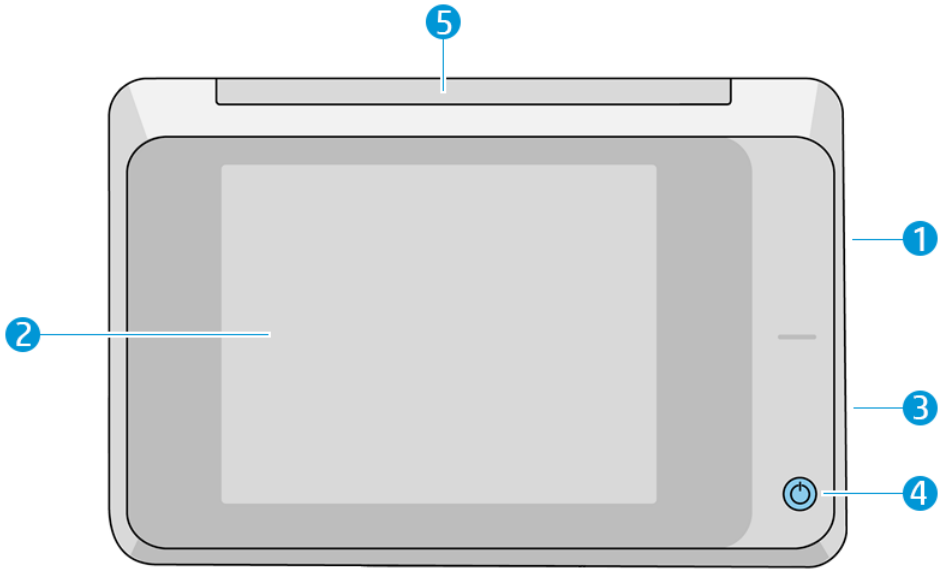

It includes the following components:

1. A Hi-Speed USB host port, intended for connecting a USB flash drive, which can provide firmware update files to the printer
2. The front panel itself: an 8 inch, full-color, touch-sensitive screen with a graphical user interface
3. The loudspeaker
4. The power key
5. The beacon

The front panel has a large central area to display dynamic information and icons. On the left and right sides you can see some fixed icons at different times. Normally they are not all displayed at the same time.

Left and right fixed icons

- Tap to return to the home screen.
- Tap to go back to the previous screen. This does not discard any changes made in the current screen.
- Tap to cancel the current process.

Home screens

There are two top-level screens that you can move between by sliding your finger across the screen, or tapping the appropriate button at the bottom of the screen:

- The first main screen provides direct access to the most important functions.

Printer

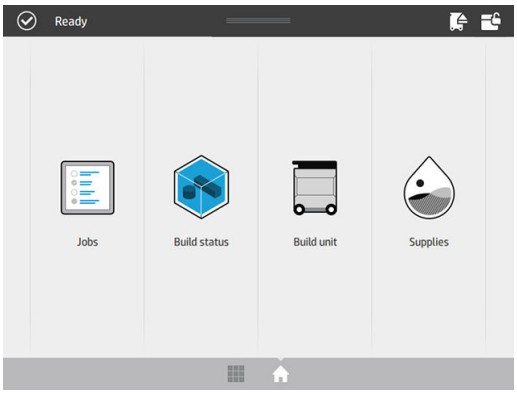

Processing station

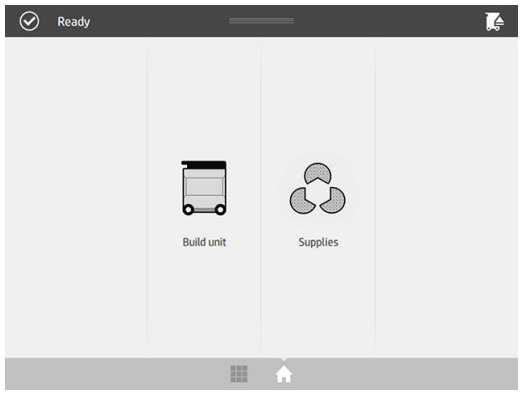

- The all-app screen displays a list of all available apps.

Printer

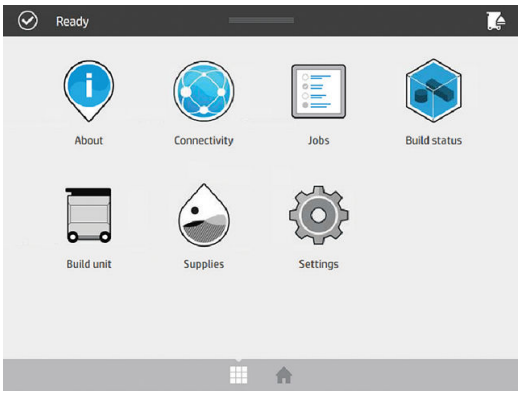

Processing station

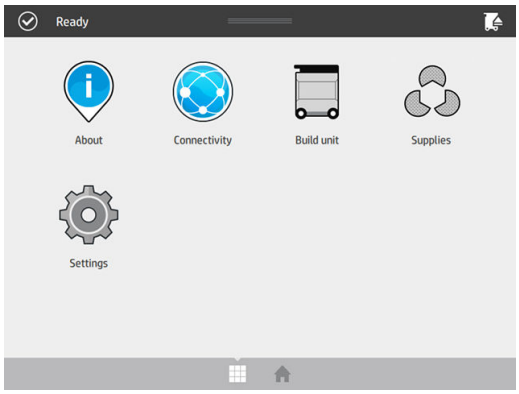

Status center

At the top of the front panel is the status center, which can be expanded by swiping down from the top. This is visible on almost all screens, except when an action is taking place. In the status center, you can see the status of the printer or processing station, and can directly cancel its status (for example, **Printing**) and alerts.

There are other actions you can perform fron the status center, such as moving the carriage and recoating unit for maintenance, ejecting the build unit, or unlocking the top cover.

Beacon

The printer has a beacon located on top of the front panel; it gives a summary of the printer status that can be seen from a distance.

IMPORTANT: The information provided in the beacon is for functional information purposes only, and is not relevant to your safety. Warning labels on the equipment should always be heeded, regardless of the status indicated by the beacon lights.

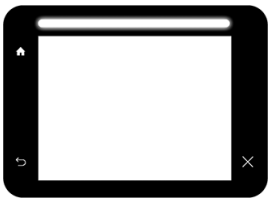	White light	The printer is ready.
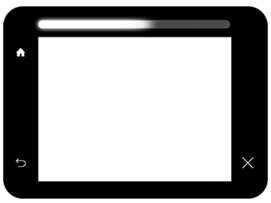	White moving light	The printer is printing or preparing to print.
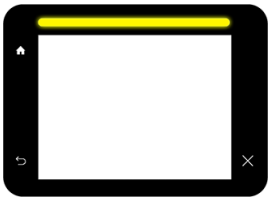	Yellow light	The printer can print, but there is something wrong. If the problem persists, contact your support representative. While printing, you will see a yellow instead of a white light.
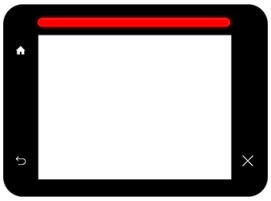	Red light	The printer is unable to print and needs attention, or a major subsystem of the printer is not working.

You can change the beacon settings by tapping , then **System** > **Beacon**. For example, you can change the brightness of the beacon. You can also turn off beacon warnings and show only definite errors.

Change system options

You can change various printer system options from the front panel. Tap , then **System**.

- **Date and time options** to view or set the printer's date and time.
- **Speaker volume** to change the volume of the printer's loudspeaker. Select **Off**, **Low**, or **High**.
- **Front panel brightness** to change the brightness of the front-panel display. The default brightness is 50.
- **Unit selection** to change the units of measurement in the front-panel display. Select **English** or **Metric**. By default, units are set to **Metric**.
- **Restore factory settings** to restore the printer settings to their original values as set in the factory. This option restores all of the printer settings except the Gigabit Ethernet settings.

Set the administrator password

You can set the administrator password from the front panel. Tap , then **Security** > **Administrator password**, and enter the password. If a password has already been set, you will need to give the old password in order to set a new one.

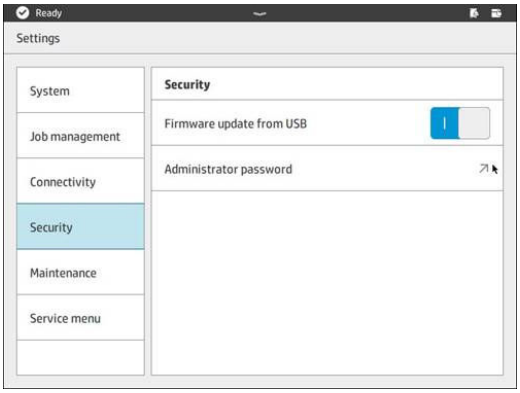

The administrator password must be given in order to change printer settings.

Software

HP software for your 3D printing solution can be downloaded from the following places:

- http://www.hp.com/go/jetfusion3D4200/software
- http://www.hp.com/go/jetfusion3D4210/software
- http://www.hp.com/go/jetfusion3Dprocessingstation/software

HP SmartStream 3D Command Center

The Command Center has two views. Click in the title bar to switch between widget and default view.

- Default view: Display medium and large cards.

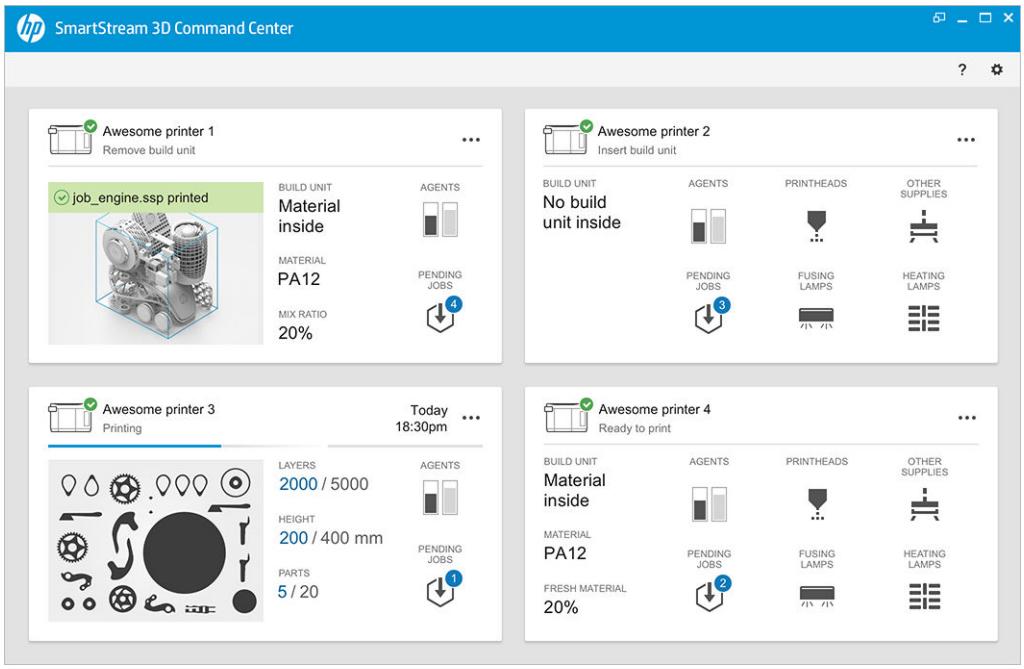

- Widget view: Display widget cards.

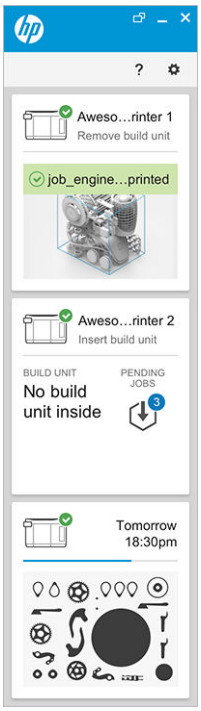

There is one card per printer. In the default view, you can choose medium or large cards.

The content of a card depends on the situation: before printing, printing, or after printing. While printing, the following information appears on the card:

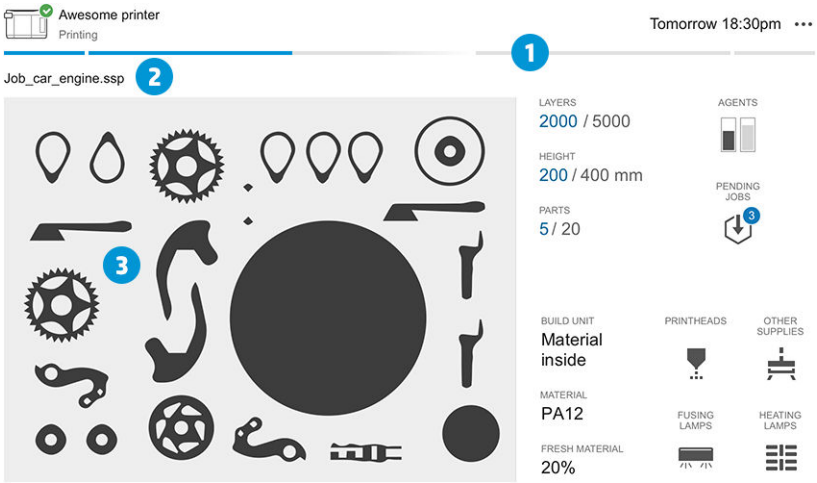

1. Progress bar showing the progress of the build
2. Job name
3. Job cross-section image showing the slice currently printing

NOTE: There are two possible views: layers or isometric view.

- LAYERS: The number of layers printed, and the total number of layers to print
- HEIGHT: The height printed, and the total height to print
- PARTS: The number of parts printed, and the total number of parts to print
- AGENTS: A real-time display of the level of the agents

- PENDING JOBS: The number of jobs in the queue
- BUILD UNIT: The status of the build unit and type of build material in the build chamber
- PRINTHEADS: Displays alerts or errors if any
- OTHER SUPPLIES: Displays alerts or errors if any
- MATERIAL: The name of the material in use
- FRESH MATERIAL: The percentage of the material that is fresh (from a material cartridge); the rest of the material is from the storage tank
- FUSING LAMPS: Displays alerts or errors if any
- HEATING LAMPS: Displays alerts or errors if any

Warnings and errors

Cards may display warnings and errors, which may override the printer status, depending on their importance, which is determined by the printer.

Warnings

Warnings are about non-urgent issues, such as a maintenance routine. A warning about a particular component is displayed on the icon representing that component.

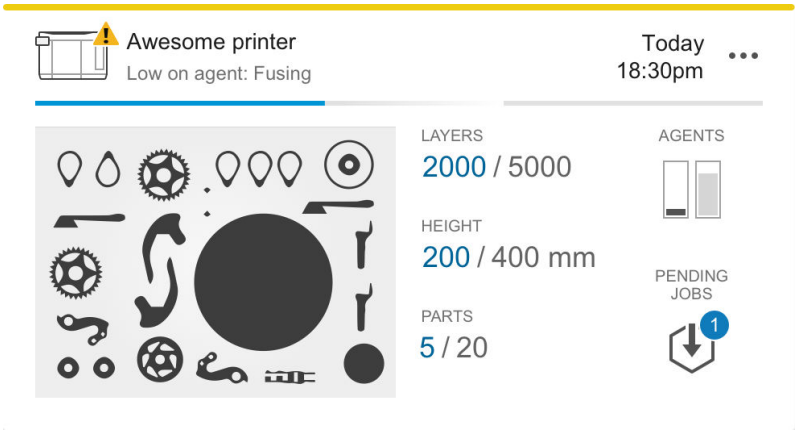

Errors

Errors are about urgent issues that could stop the printer from starting a job, such as a broken lamp. An error about a particular component is displayed on the icon representing that component.

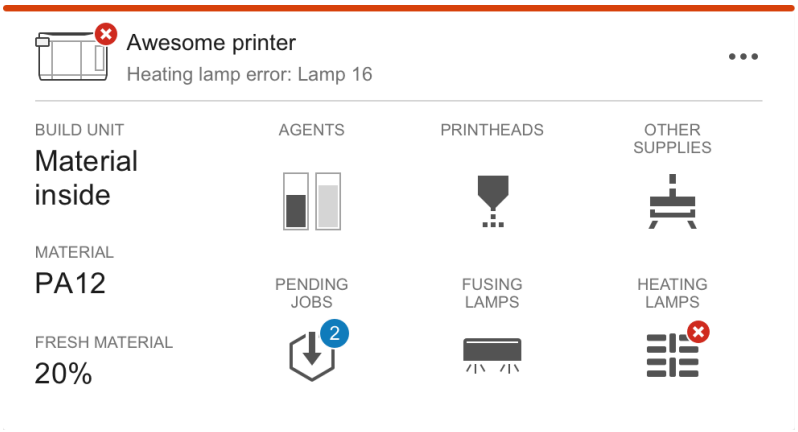

An error that interrupts printing will overwrite the contents of the card:

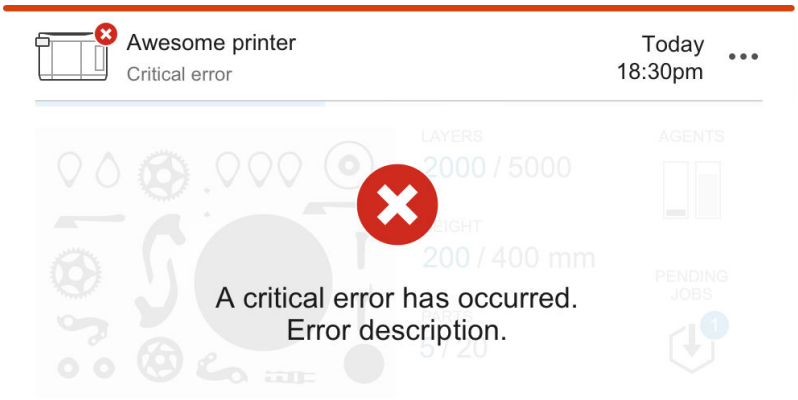

Firmware update

If there is a firmware update available, the Command Center displays a new message in the notification center. Go to the front panel of the printer and/or processing station to proceed. Click the message, download the new firmware, copy it to a USB flash drive, and insert the flash drive into a USB port in the printer and processing station.

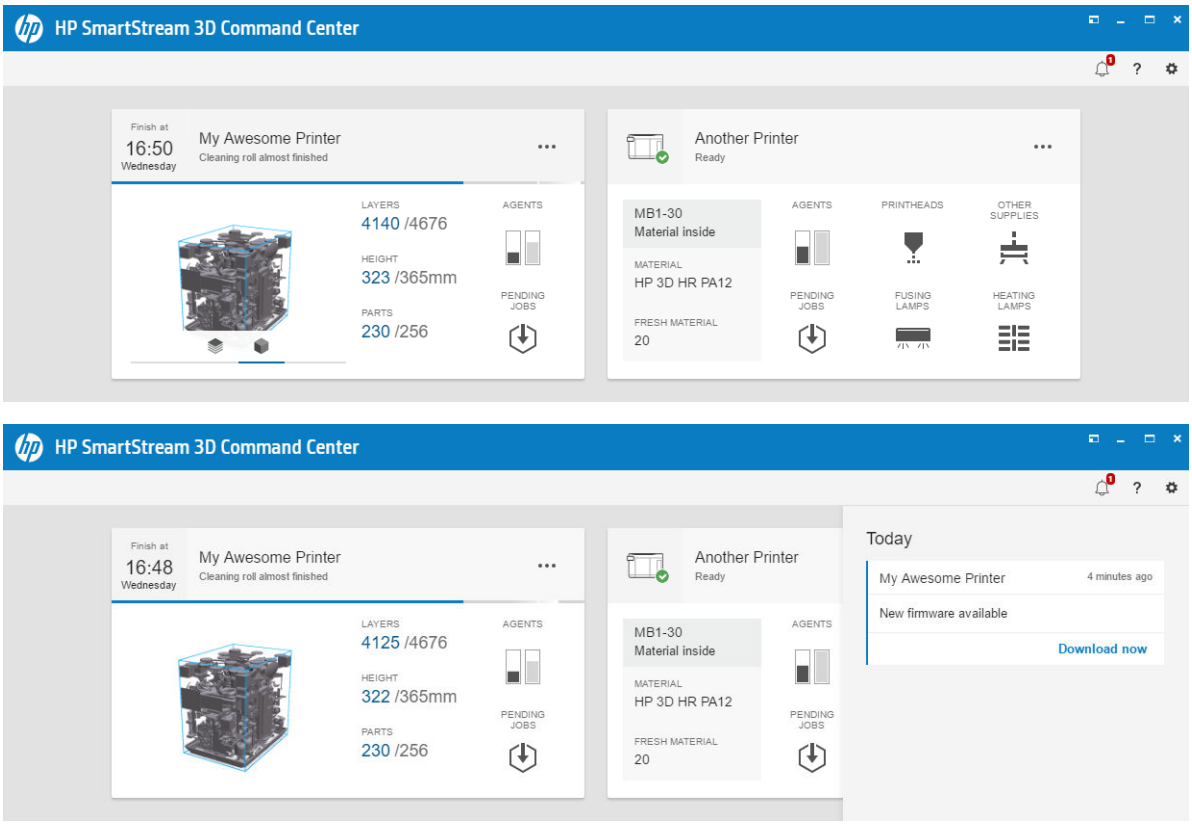

Install a printer

1. Click ⚙, then **Printer management** > **Add a printer**.

2. Connect the printer with your HP PrintOS account. If you do not have an account, you can create one by clicking **Create account**. HP PrintOS is a print-production operating system with Web and mobile apps that help you get more out of your HP printers and simplify production.

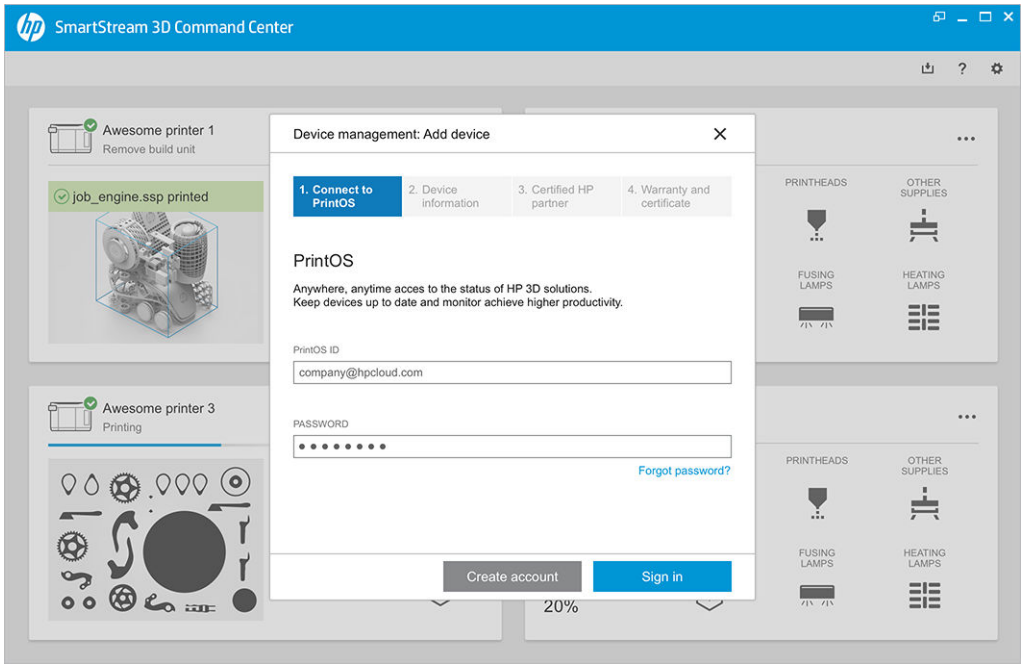

3. Add a name for the printer and the IP address or host name. To find the IP address, see Printer and processing station networking on page 35.

   You must also enter the administrator password. See Set the administrator password on page 25.

   When you have filled in the three fields, click **Save**.

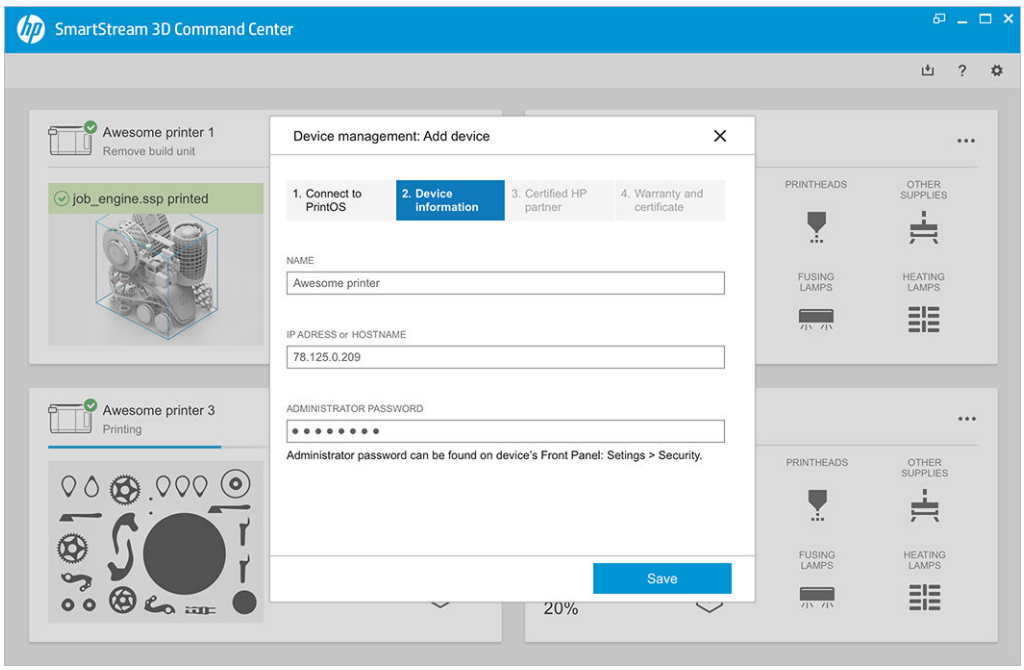

4. If the printer has not yet been registered, you will be asked to add your HP certified partner name, which makes it easier to help you..
5. The front panel asks you to fill in the Certificate of Installation form. When you click the Certificate of Information link, a Web-based form appears, on which you should answer all the questions.

   This Certificate of Installation step is mandatory for every new printer installation. If you are reinstalling the Command Center, or if the printer's Certificate of Installation was filled in before, this step can be skipped.

The name of the new printer should appear on the list of printers.

HP SmartStream 3D Build Manager

Use the powerful 3D print-preparation capabilities of HP SmartStream 3D Build Manager to help make all of your 3D printing jobs successful:

1. Add parts to begin preparing the print job.
2. Rotate, size, and position the part on the bed.
3. Automatically locate and fix 3D geometry errors.
4. Send a printer-ready file to a connected 3D printer or save the printable file.

You can find more information about the Build Manager in the *HP SmartStream 3D Build Manager User Guide*: see Documentation on page 2.

4 Power on and off

NOTICE: Operate the equipment only within the specified ranges of operating temperature and humidity (see the site preparation guide). If the equipment or supplies are exposed to conditions outside the environmental operating range, wait at least 4 hours for everything to reach environmental operating conditions before turning on the equipment or using the supplies.

- Turn the printer on and off
- Turn the processing station on and off
- Circuit-breaker labels

Turn the printer on and off

Turn on the printer for the first time

1. Make sure that the two bottom rows of circuit breakers at the front right of the printer are all in the up position and that the three green lamps are on. If any of them are off, check with your electrician.

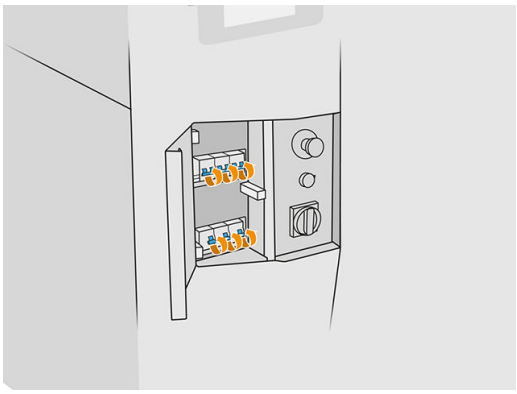

2. Turn the main switch to the on position.

3. Wait for the front panel to tell you that the printer is waiting for rearm.
4. Perform a visual check of the printer.
5. Press the blue rearm button at the front left of the printer. This enables all of the printer's high-power subsystems.
6. Wait for the front panel to indicate that the printer is ready. This can take several minutes. When initialization is complete, the front panel displays a **Ready** message. If a system error message is displayed, see System errors on page 240.

Turn the printer on and off

The printer has two power-off levels. Level 1 is recommended if you intend to use the printer again soon. Otherwise, you are recommended to use level 2, which is complete shutdown.

Level	Turn off	Turn on
1: Standby (5 V)	Front-panel power button off	Front-panel power button on
2: All printer systems off	1. Front-panel power button off 2. Red main power switch off	1. Red main power switch on 2. Front-panel power button on

Turn the processing station on and off

Turn on the processing station for the first time

1. Make sure that the wheels are braked: the processing station should remain stationary while operating.
2. Make sure that the two bottom rows of circuit breakers at the front right of the station are all in the up position.

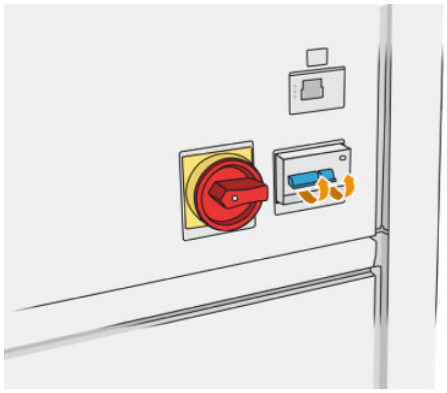

3. Turn the service switch to the on position.

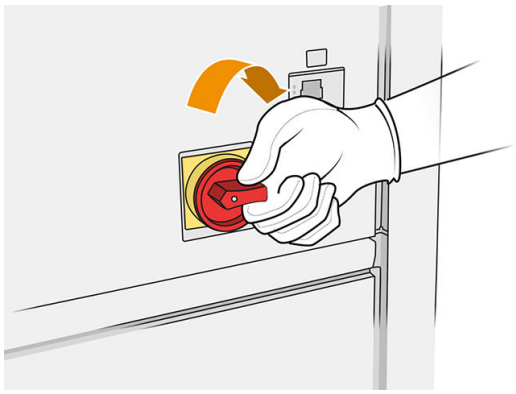

4. Perform a visual check of the station.
5. Wait for the front panel to indicate that the station is ready. This can take several minutes. When initialization is complete, the front panel displays a **Ready** message. If a system error message is displayed, see System errors on page 240.

Turn the processing station on and off

The station has two power-off levels. Level 1 is recommended if you intend to use the station again soon. Otherwise, you are recommended to use level 2, which is complete shutdown.

Level	Turn off	Turn on
1: Standby (5 V)	Front-panel power button off	Front-panel power button on
2: All processing-station systems off	1. Front-panel power button off 2. Red main power switch off	1. Red main power switch on 2. Front-panel power button on

Circuit-breaker labels

Label	Description
	Main power
	DC power
	E-box
	Build unit
	Fusing lamps
	Heating lamps
	Rearm
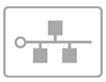	LAN

5 Printer and processing station networking

The printer provides a single RJ-45 port for a network connection. In order to meet Class B specifications, the use of shielded I/O cables is required. For optimal performance, you are recommended to use Cat 5/5e or Cat 6 cabling and gigabit-capable local network equipment.

A correct network setup is required to operate the printer, as all communication with printing and management software happens through the network.

Configuration

To access the network settings, tap and then on the front panel.

Hostname

You can assign a customized hostname to the printer. If the network infrastructure supports it, the printer will attempt to register the hostname to the DNS service, making it possible to address the printer using the hostname rather than the IP address.

Similarly, you can assign the domain suffix, to define the printer's fully qualified domain name.

IPv4 configuration

You can select whether the printer should try to discover automatically the IPv4 network settings using the DHCP protocol, or whether you want to configure them manually. These settings include:

- **IP address**: The unique Internet Protocol address assigned to the printer.
- **Subnet mask**: The mask corresponding to the printer's IP address.
- **Default gateway**: The IP address of the network gateway.
- **DNS configuration method**: Whether DNS servers should be assigned by DHCP service or manually.
- **Primary and secondary DNS servers**: The IP addresses of the DNS servers.

Link speed

The embedded network controller supports connection to IEEE 802.3 10Base-T Ethernet, IEEE 802.3u 100Base-TX Fast Ethernet, and 802.3ab 1000Base-T Gigabit Ethernet compliant networks. When connected and powered on, the printer auto-negotiates with your network to operate with a link speed of 10, 100, or 1000 Mbps, and to communicate using full- or half-duplex mode. However, you can manually configure the link using the printer's front panel, or through other configuration tools once network communication is established.

Troubleshooting

Link issues

The printer has status lights (LEDs) beside the network connector that indicate the link status and network activity.

- When the green light is on, the printer has successfully linked to the network.
- When the yellow light is blinking, there is transmission activity over the network.

If the printer fails to connect to the network, both LEDs will be off. In this situation, try the following steps:

1. Check the cable connections at both ends.
2. Consider replacing the cables with ones that are known to work.
3. Consider switching to another network connector in the network switch, hub, or device to which the printer is connected.
4. Manually configure the link setting to match the port configuration of the network hub or switch.
5. In case of doubt or misconfiguration of link settings, reset the network parameters to their factory settings.

Restore factory settings

In the case of accidental misconfiguration, you can reset the network settings to the factory defaults by tapping **Restore factory settings** in the Network Settings configuration menu.

6 Supplies

- Printer
  - Agents
  - Printheads
  - Printhead cleaning roll
- Processing station
  - Material
    - Material cartridges
  - Storage and build unit
  - Storage and external tanks
- How to recycle supplies

Printer

Agents

There are two kinds of agents: fusing and detailing agents.

The HP Jet Fusion 4200 and 4210 accept agent cartridges with a capacity of 3 or 5 liters.

Please note:

- This is a dynamic security-enabled printer. Cartridges using a non-HP chip may not work, and those that work today may not work in the future. For more information, see http://www.hp.com/go/learnaboutsupplies.
- This printer is not designed to use continuous agent systems. To print successfully, remove any continuous agent system and install genuine HP cartridges.
- This printer is designed for agent cartridges to be used until they are empty. Refilling cartridges prior to depletion could cause your printer to fail. If this happens, insert a new genuine HP cartridge to continue printing.

Status

At the printer's front panel, tap , then **Agents**, then tap any agent to see its status:

- **Missing**: The agent is missing.
- **Empty**: The agent is empty and should be replaced.
- **Replace**: The agent is faulty and should be replaced.
- **Reseat**: The agent is not responding; removing and reinserting it may solve the problem.
- **Wrong**: The agent type is not suitable for this printer.
- **Expired**: The agent has reached its expiration date. Using expired agents may affect the warranty on your printheads.
- **Low on agents**: The agent is low and should be replaced soon.
- **Very low on agents**: The agent is very low and should be replaced soon.
- **Incorrect**
- **Non-HP**
- **OK**: The agent is working normally.
- **Out of agents**: The agents should be replaced.

NOTE: The level of each agent shown on the front panel is an estimate.

LEDs

- **White**: OK
- **Yellow**: Warning
- **Red**: Error, out of agent

Replace an agent

NOTE: You can replace the agent cartridges while printing continues, because the printer is supplied from the intermediate tanks.

1. At the printer's front panel, tap , then **Agents** > **Replace**.
2. Press the agent door to release it, and open the door.

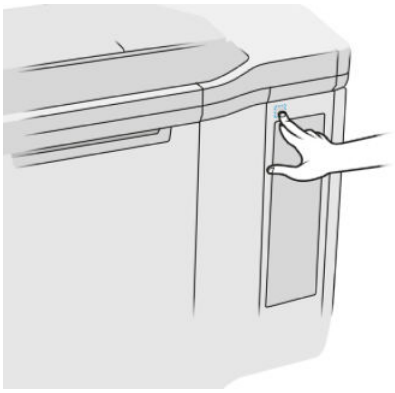

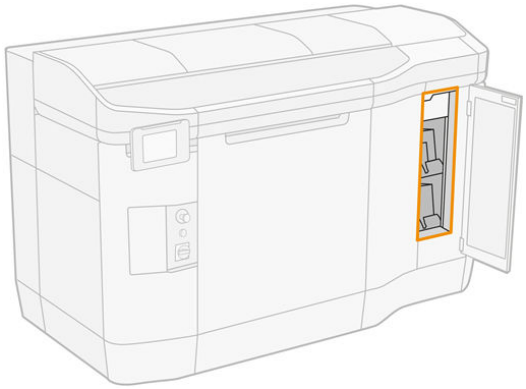

3. Locate the agent to be replaced. You can see which agent needs to be replaced on the front panel; it is also indicated by a red LED beside the cartridge.
4. Disconnect the agent connector by pressing the tabs on each side of it and pulling it away gently.

TIP: When removing or inserting an agent connector, rotate it clockwise a little to avoid interference between the connector and the agent box.

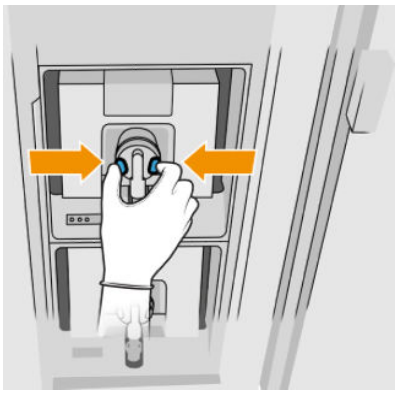

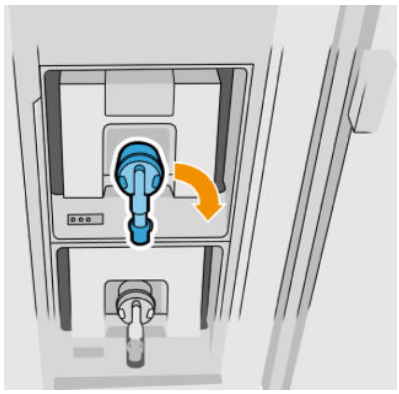

5. Remove the agent.

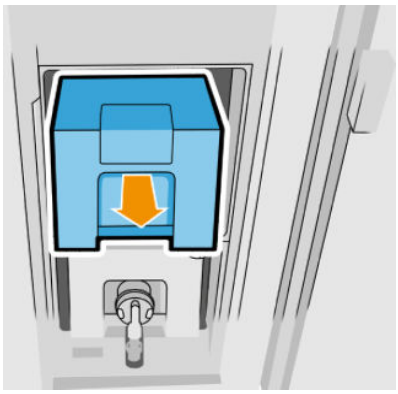

6. Dispose of the old agent, following the instructions on the packaging. The agent bag should be removed and disposed of in compliance with federal, state, and local regulations. The other agent parts (plastic retainer and packaging box) can be recycled through commonly available recycling programs. HP recommends that you wear gloves when handling supplies.

7. Remove the new agent from its packaging, place it on a flat surface, and turn it four times (rotating it through 360 degrees) as indicated on the label, to ensure that the agent is well mixed before use.

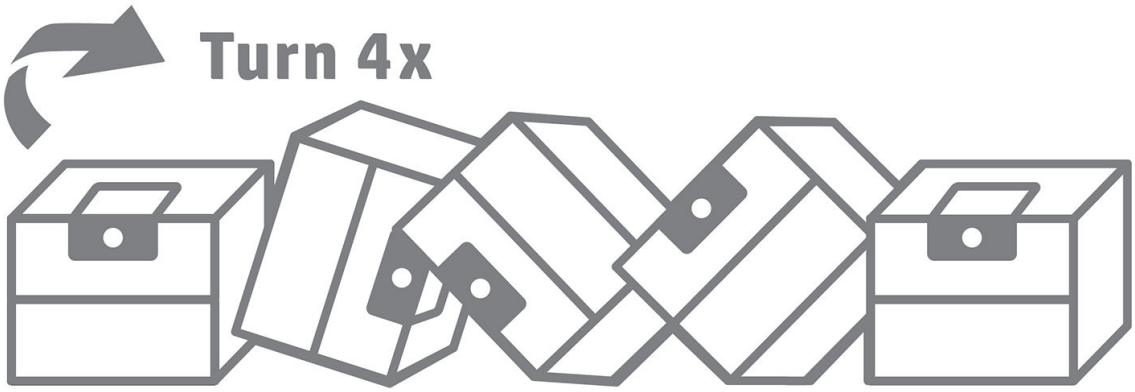

8. Push down and fold inward the top part of the handle. Do not cut it.

9. With one hand on the bottom of the agent and the other on the fold, put the new agent into its correct place in the printer.

10. Without pressing the tabs, connect the agent connector to the cartridge.

IMPORTANT: If you press the tabs when connecting it, the agent will not be locked.

11. Ensure that the tabs on each side of the agent connector are open but in place, showing a successful connection. You will hear a click.

12. Close the door.
13. Tap **Finish** and **Check** on the front panel.

TIP: If the new agent fails to work, follow the troubleshooting procedure below. The problem may be with the connector rather than the agent itself.

Agent troubleshooting

1. Check that the agent is designed for your printer.
2. Use the correct procedure to change agents, through the front panel.
3. Check that there is no obstruction in the agent connector.
4. Check that the agent is of the correct type (fusing or detailing agent). The wrong type will not match the connector.
5. Check that the agent connector is correctly oriented (compare with another agent).
6. Ensure that you have inserted the connector correctly and fully. You should hear a click.
7. Ensure that the tabs on each side of the agent connector are open but in place, showing a successful connection.
8. Check the agent connector. You may find that the agent connectors have become bent while the agent was disconnected. This means that they cannot connect properly, and you will see a reseat message. To correct this problem, use pliers to straighten the connectors so that they will fit into their slots.
9. If the problem still remains, call your support representative.

Printheads

The printheads take agents and deposit them on the build.

CAUTION: Observe precautions when handling printheads because they are ESD-sensitive devices (sensitive to ElectroStatic Discharges). Avoid touching pins, leads, and circuitry.

The printer's writing system uses three dual-agent printheads with 31,680 nozzles each; so each agent has 15,840 nozzles. The printheads are numbered as shown below.

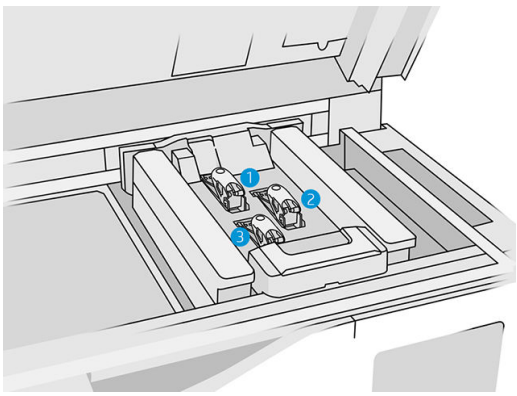

1. Rear printhead
2. Middle printhead
3. Front printhead

Printheads should be stored vertically: if boxed, with the box arrows pointing up; if out of the box, with the nozzle cap up.

Status

At the printer's front panel, tap , then **Printheads**, then tap any printhead to see its status:

- **OK**: The printhead is working normally.
- **Check pending**
- **Missing**: The printhead is missing.
- **Error**
- **Warning**
- **Non-HP**

Replace a printhead

1. At the printer's front panel, tap , then **Printheads** > **Replace**.
2. Open the top cover.

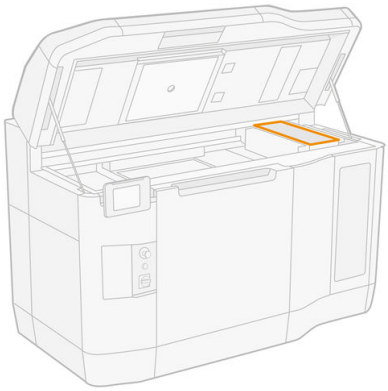

3. Pull the handle to open the printhead cover.

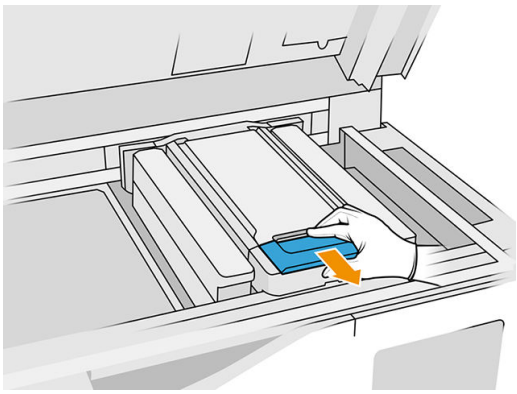

4. Lift off the printhead cover.

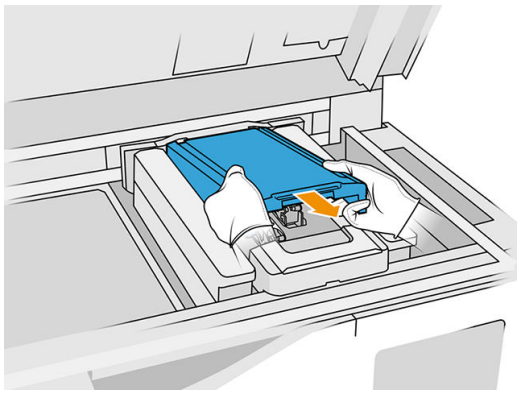

5. Release the printhead latch.

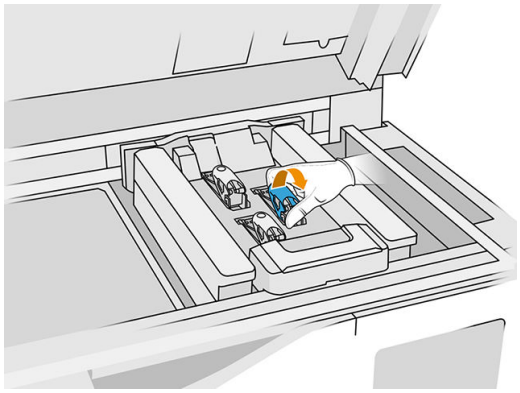

6. Lift the printhead latch.

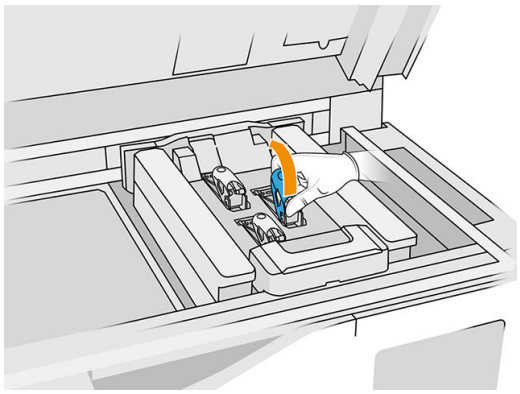

7. Lift the printhead handle, and pull it gently upwards to disconnect the printhead from the carriage.

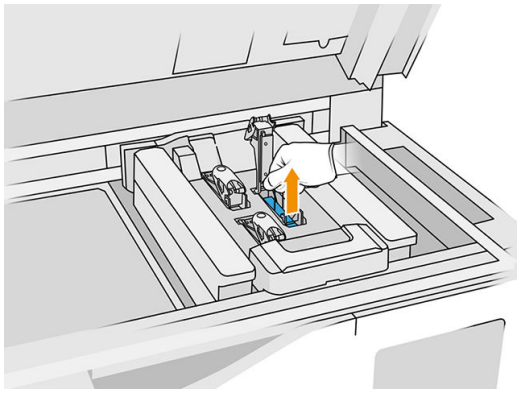

8. Dispose of the old printhead in accordance with local regulations. Most HP printheads can be recycled through the HP supplies recycling program. For more information, see http://www.hp.com/recycle/. HP recommends that you wear gloves when handling supplies.

9. Shake the printhead according to the instructions on its packaging.

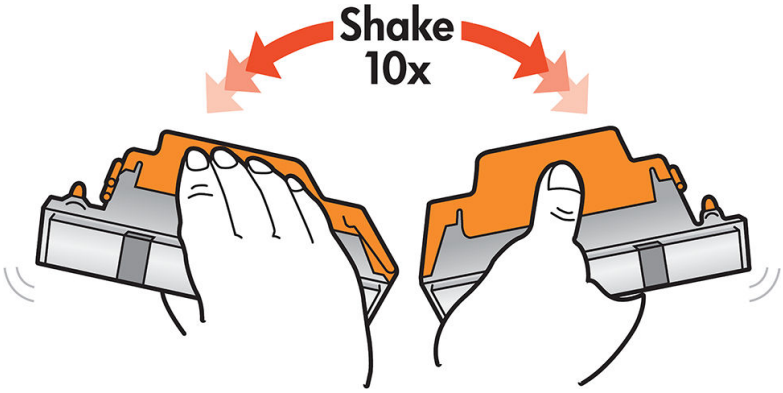

10. Remove its packaging and protective caps.

TIP: You may wish to keep the protective caps for later reuse, in case you ever want to remove a printhead from the printer temporarily.

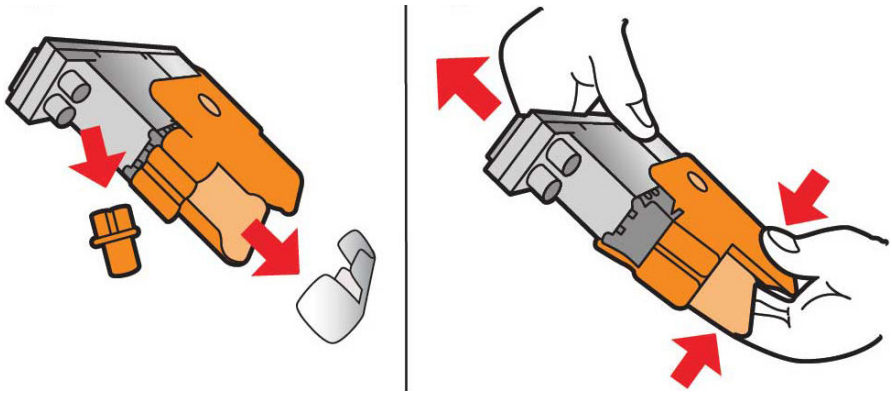

11. Put the new printhead into its correct place in the printer, and lower its handle.

CAUTION: Insert the printhead slowly, without hitting any parts of the carriage. It may be damaged if you insert it too fast, or if you hit something.

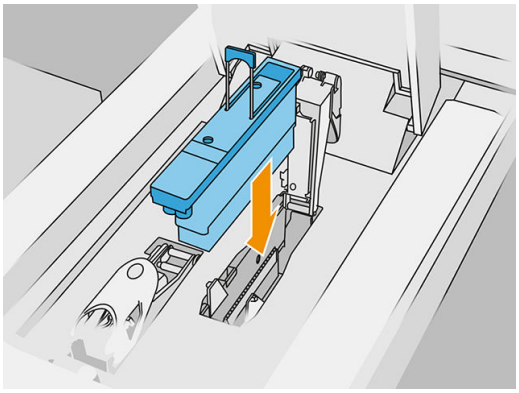

12. Lower the latch until it lies on the printhead, but do not close it yet.

13. Press the primer to ensure that the primer ports are well inserted.

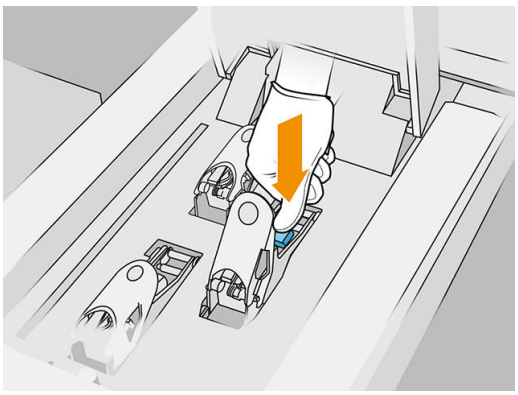

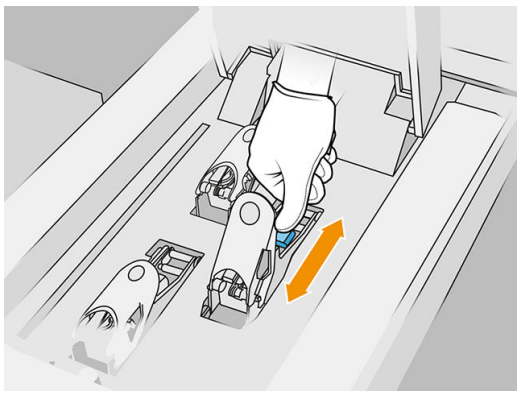

14. Close and secure the latch.

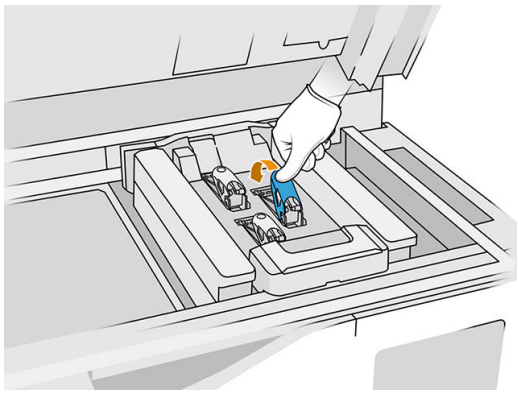

15. Put the printhead cover back into place.
16. Close the top cover.
17. Tap **Finish** and **Check**. The printer checks that the new printhead has been correctly inserted, and recommends printhead alignment. See Align the printheads on page 225.

NOTE: If the new printhead is rejected or you are asked to reseat it, try cleaning the printhead contacts (see Clean the printhead contacts on page 136).

Printhead cleaning roll

The printhead cleaning roll is a roll of absorbent material used in the normal operation of the printer to wipe the printheads periodically: at the beginning and end of printing, while printing, on printhead check and clean, and so on. This helps the printheads to deliver agents continuously and maintain print quality.

The roll should be replaced whenever it is used up, to avoid damaging the printheads. The frequency of replacement depends on your use of the printer. A single roll will last for approximately 10 full build jobs or 50,000 layers in Balanced print mode.

An alert is displayed when 75% of the roll has been used, and again when 95% of it has been used. You can choose to replace the roll at any time. The printer will not print when the roll has been 100% used.

If there is not enough of the roll to finish a new job, the printer will not start the job.

At the printer's front panel, tap , then **Printhead cleaning roll** to see the status of the roll.

TIP: You should not touch the printhead cleaning roll except when you need to replace it. Any interference with the roll may prevent the printer from keeping track of roll usage, in which case you may see spurious error messages, and a printing job may be canceled unnecessarily.

Replace the printhead cleaning roll

1. Ensure that you have a new cleaning roll ready.

2. Wear gloves.
3. At the printer's front panel, tap , then **Printhead cleaning roll** > **Replace**.
4. Tap **Start** when ready.
5. Open the agent door and the cleaning-roll doors.

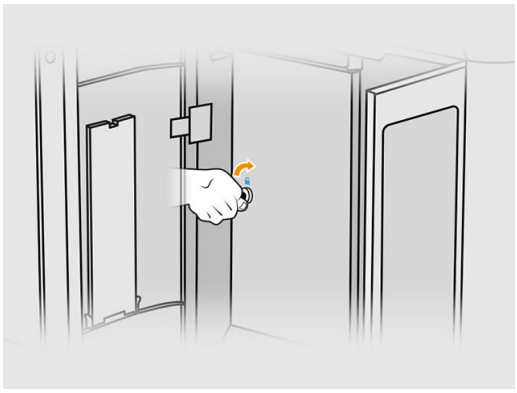

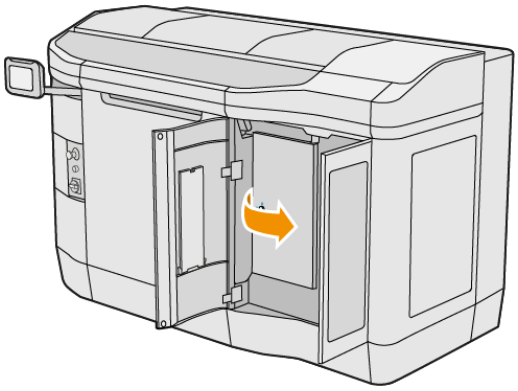

6. Open the top cover.
7. Detach the end of the cleaning roll from the upper roll core.

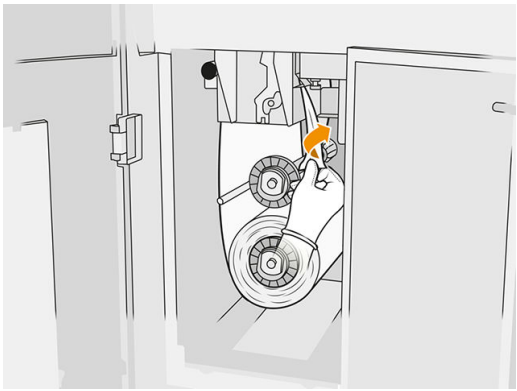

8. Pull the black knob at the top left and move the pinch system aside.

9. Clean the rubber blade, the roll input, and the cleaning roll platen with the end of the roll.

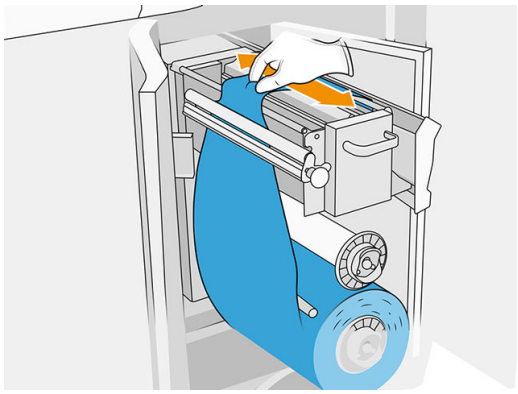

10. Wind the remainder of the cleaning roll onto the lower axle.

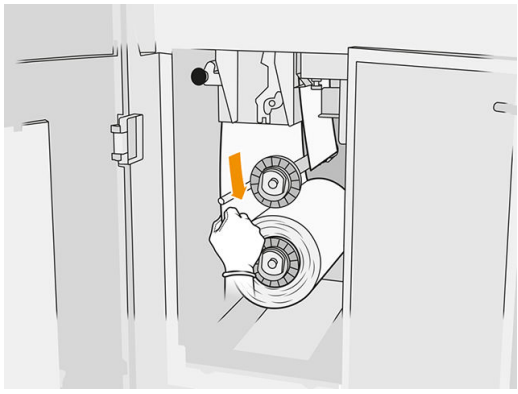

11. Remove the hub of the lower roll by pressing on the tab, then remove the lower roll.

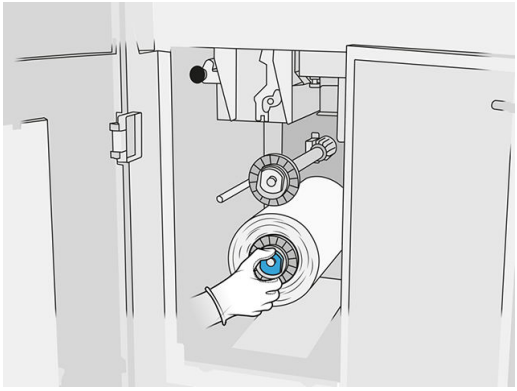

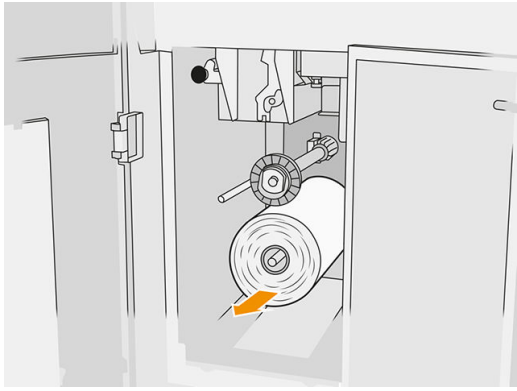

Dispose of the roll of used cleaning material according to the instructions provided with the new roll. Also consult your local authorities to determine the correct manner in which to dispose of wastes.

12. Remove the hub of the upper roll, then remove the roll core and place it on the lower axle.

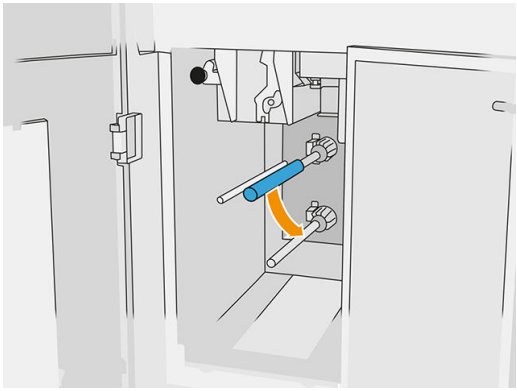

13. Place the lower hub, pull the core against the hub, and push them both in until the hub snaps into place (you will hear a click).

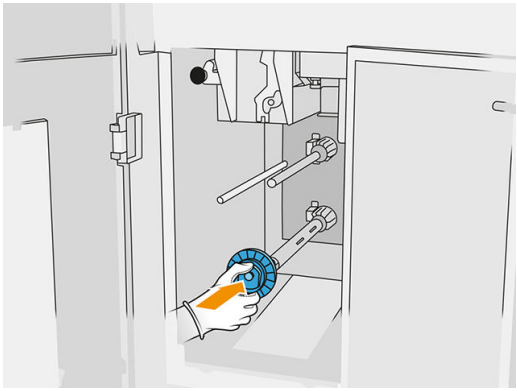

14. Place the upper hub onto the new roll, and slide them onto the upper axle until you hear a click.

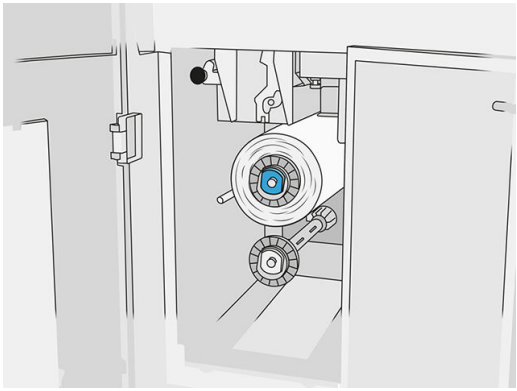

⚠ CAUTION: Make sure the cloth is aligned with the front of the core, touching the hub. If you push the roll by the cloth when placing the new roll, you could detach the cloth from the core, causing problems while printing.

15. Pass the leading edge of the roll over the upper rollers, and thread the cleaning material through the rollers on the left.

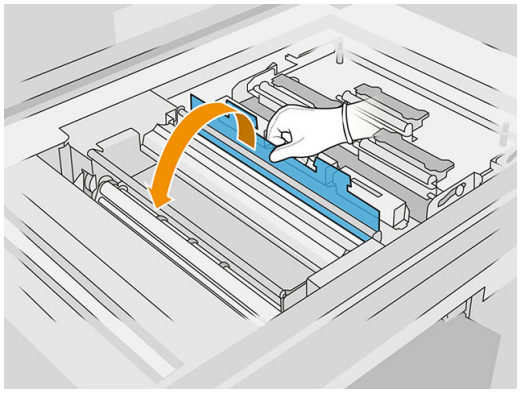

16. There is a strip of polyester film on the leading edge of the cleaning material. Insert it into the hole in the takeup core, which takes hold of it.

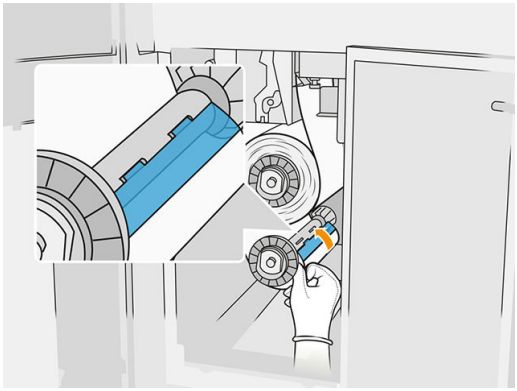

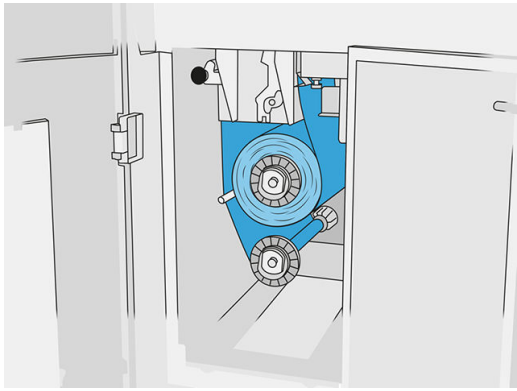

Take care to route the cleaning material correctly.

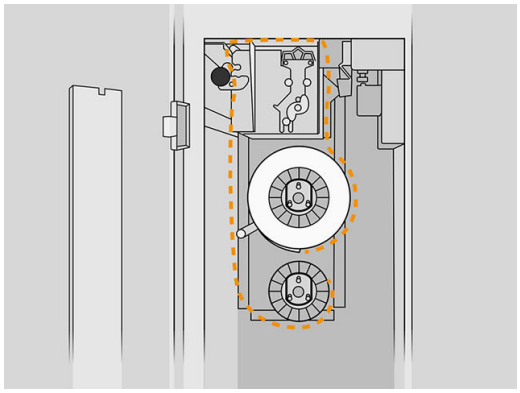

17. Rotate the lower roll one full turn.

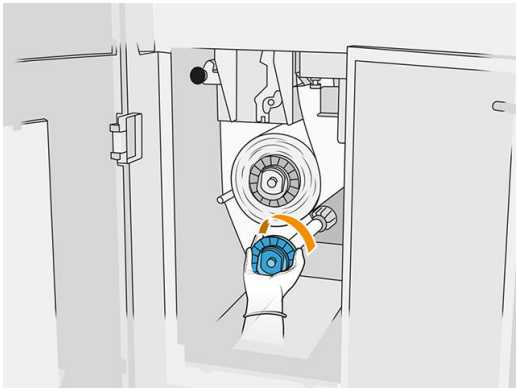

18. Restore the pinch system by moving the black knob back into place. If you feel resistance because the cleaning roll is too tight, turn the roll slightly counter-clockwise.

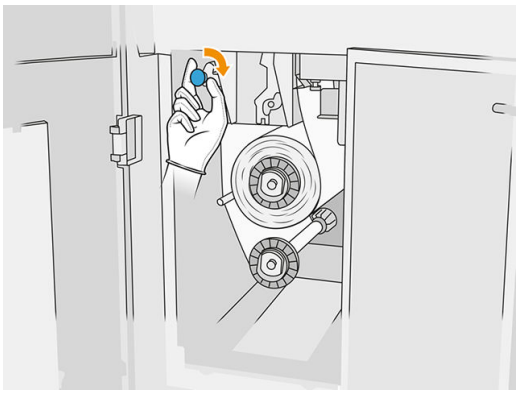

19. Close and lock the doors.

    The length of used printhead cleaning roll tracked by the printer is now reset to zero.

NOTE: If you tamper with partly-used rolls, the usage shown in the front panel will not be accurate.

20. Tap **OK** on the front panel.

Processing station

Material

Material states

- **Reusable**: Material that can be reused
- **Waste material**: Used material that should not be reused
- **Mixed**: A mixture of new and used material, by default 20% new and 80% used
- **Fresh**: New material

Material cartridges

The material cartridges deposit the material in the build unit. See the material list for ordering information.

- The HP Jet Fusion 4200 and 4210 accept cartridges with a capacity of 30 or 300 liters.
- The HP Jet Fusion 4210B accepts the use of the refillable HP Material Loading Tank allowing the use of bulk material. It also accepts cartridges with a capacity of 30 and 300 liters.

The weight of the cartridge varies according to the material type. Special care must be taken to avoid personal injury when handling heavy cartridges.

If pressure is put on a cartridge while it is being vacuumed, and the connection is removed, material spills may happen. To avoid spills:

- Do not remove the handle while vacuuming.
- Never place anything heavy—more than 1 kg (2.2 lb)—on top of a cartridge.
- Take care not to drop a cartridge.
- Do not try to force the last of the material out of an almost-empty cartridge by pressing the bag inside the cartridge.

Replace a cartridge

A cartridge should be removed and replaced when it is empty or past its expiry date. An empty cartridge is indicated in the front panel and by the LED beside the cartridge.

⚠ CAUTION: Removing a cartridge before it is empty is not recommended. Cartridges are not designed for storing material after removing the seal, and storing an opened cartridge containing material can render the material unusable and cause safety hazards, such as a cloud of material if dropped. Depending on the material, it can be sensitive to temperature, humidity, or other factors. Using cartridges under uncontrolled conditions can affect the functionality of the equipment or severely damage it.

30 liter cartridge replacement

1. At the processing station's front panel, tap , then **Fresh material** > **Replace**.
2. Go to the cartridge that you intend to remove and hold it with one hand while disconnecting the cartridge connector, by pulling it gently away from the cartridge.
3. Remove the empty cartridge.
   - If the cartridge is not empty and you intend to use it later, make sure to close the front spout.
   - If it is empty, dispose of it according to local regulations.

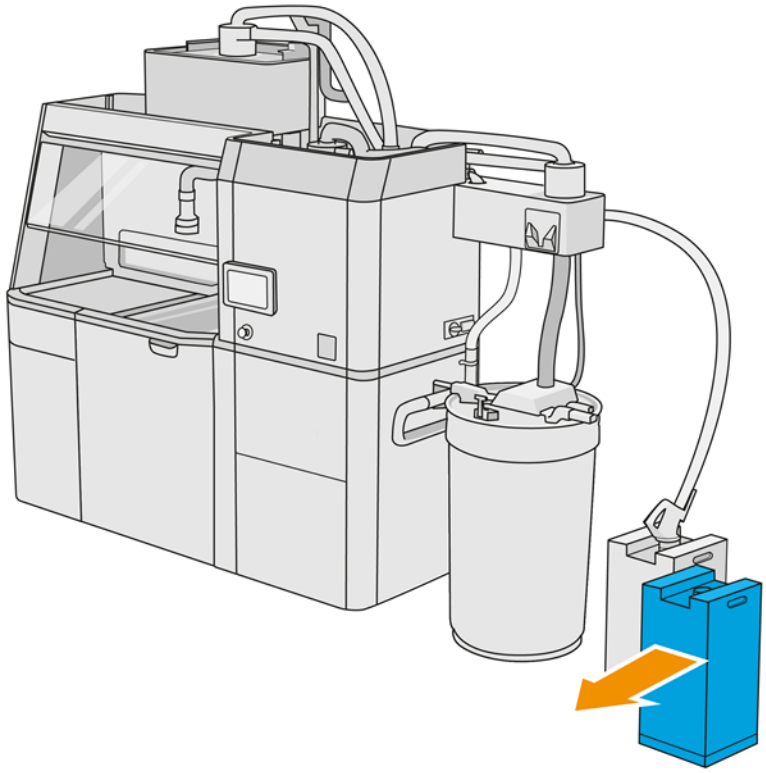

4. To prepare the new cartridge, tear off the square and fold it inside the handle as illustrated on the box.

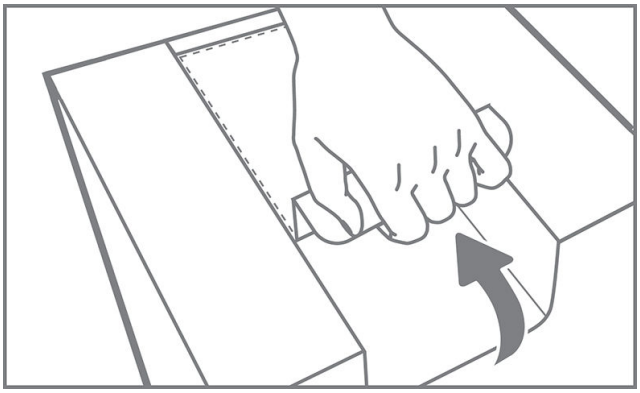

5. Remove the seal from the rear spout.

IMPORTANT: The cartridge will not work unless you remove the seal.

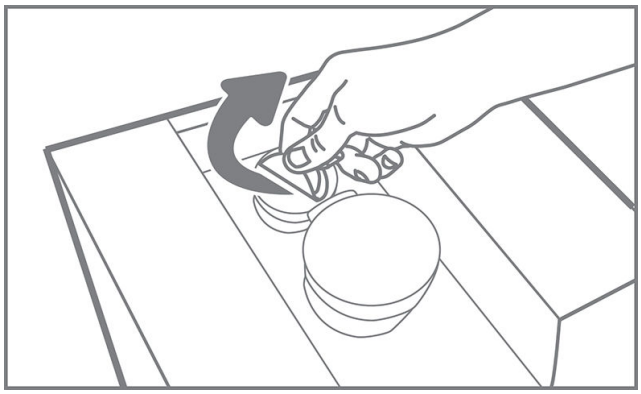

6. Put the new cartridge into its correct place on the processing station.

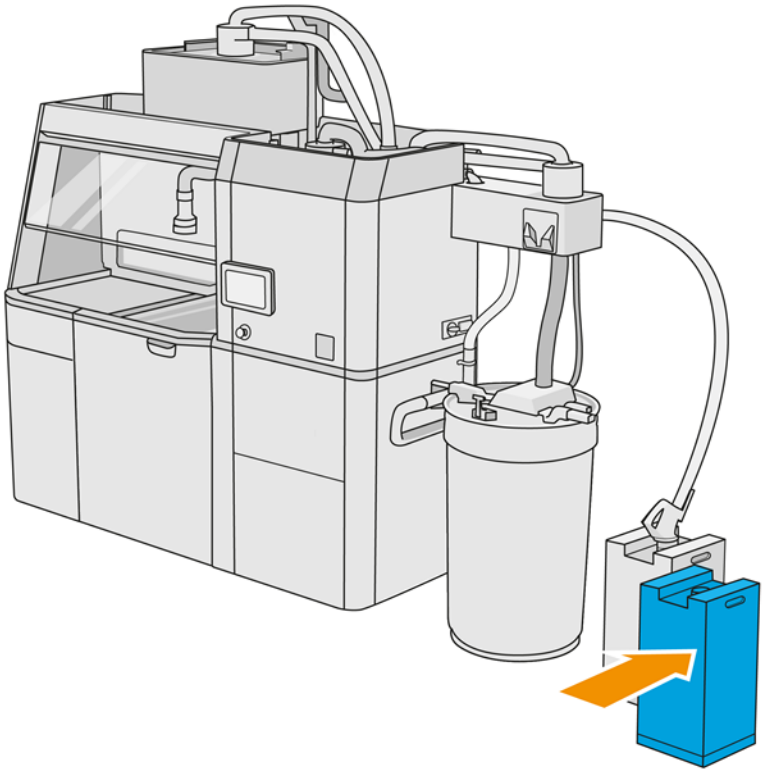

7. Open the front spout.

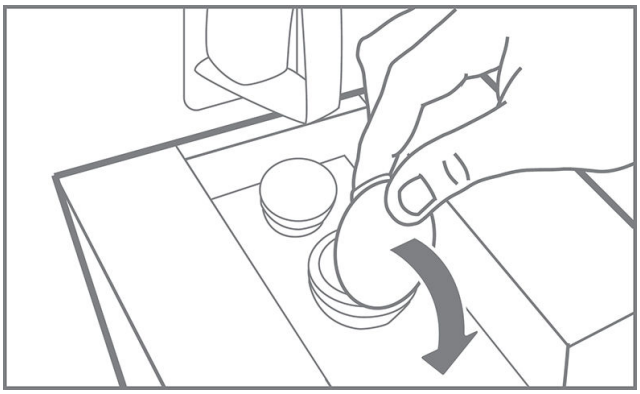

8. Remove the seal from the front spout.

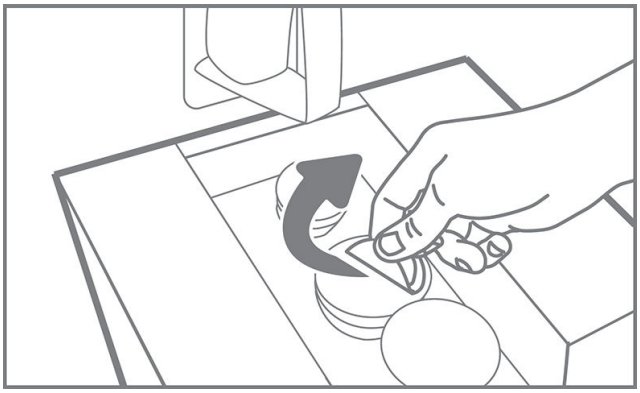

⚠ CAUTION: Once the seal has been removed, the cartridge should be used until it is empty, and not put into storage. Cartridges are not designed for storing material after removing the seal, and storing an opened cartridge containing material can render the material unusable and cause safety hazards, such as a cloud of material if dropped. Depending on the material, it can be sensitive to temperature, humidity, or other factors. Using cartridges under uncontrolled conditions can affect the functionality of the equipment or severely damage it.

9. Connect the cartridge connector to the cartridge.

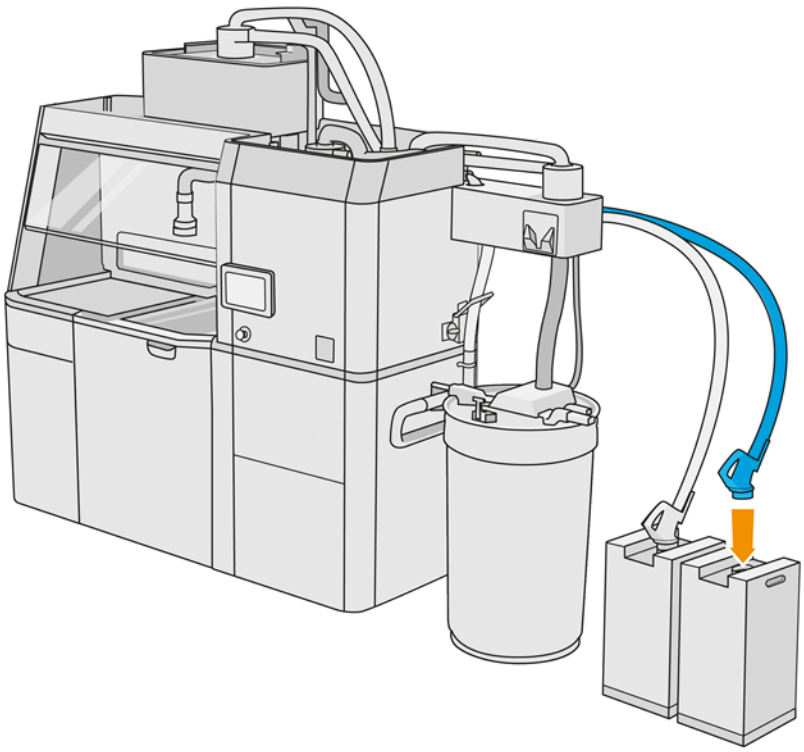

TIP: If the new cartridge fails to work, follow the troubleshooting procedure below. The problem may be with the connector rather than the cartridge itself.

LEDs

- **White**: OK
- **Yellow**: Warning
- **Red**: Error, out of material

The processing station can continue filling the build unit without any cartridges for some time, depending on the material needed.

300 liter cartridge replacement

1. At the processing station's front panel, tap , then **Fresh material** > **Replace**.

2. Use a pallet jack to move the large material cartridges next to the external tank.

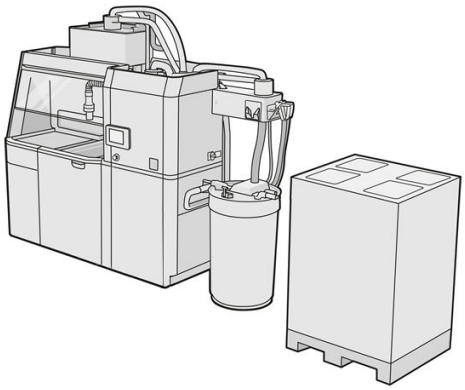

3. Remove the cardboards indicated on the packaging as 1 and 2.

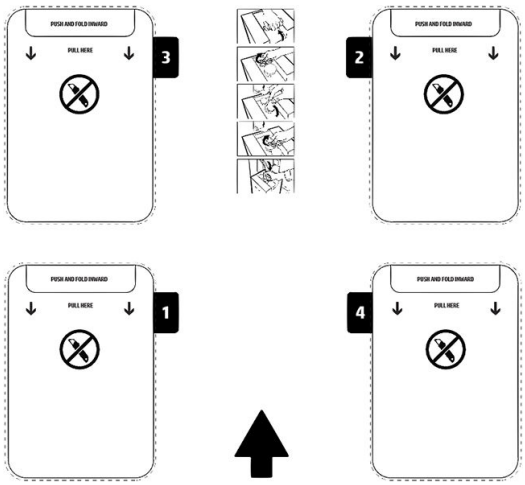

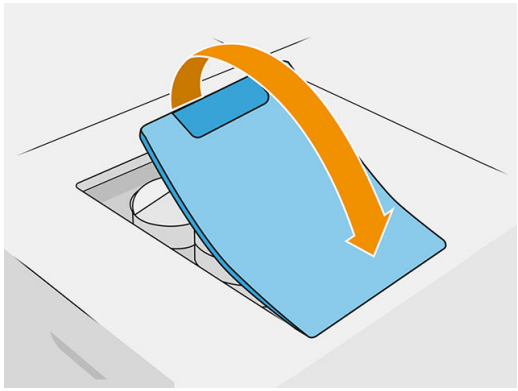

4. Remove the seal from the rear spout of slot 1.

IMPORTANT: The cartridge will not work unless you remove the seal.

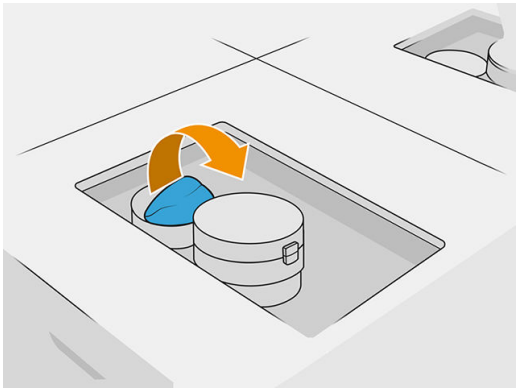

5. Open the front spout.

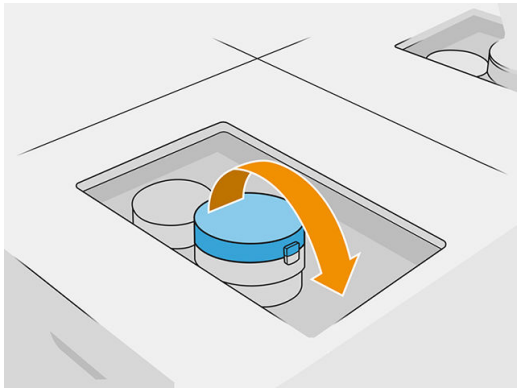

6. Remove the seal from the front spout.

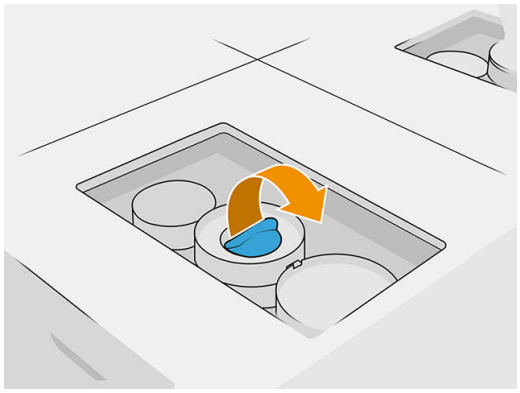

⚠ CAUTION: Once the seal has been removed, the cartridge should be used until it is empty, and not put into storage. Cartridges are not designed for storing material after removing the seal, and storing an opened cartridge containing material can render the material unusable and cause safety hazards, such as a cloud of material if dropped. Depending on the material, it can be sensitive to temperature, humidity, or other factors. Using cartridges under uncontrolled conditions can affect the functionality of the equipment or severely damage it.

7. Repeat steps 4–6 on spout 2.

8. Connect the cartridge connectors to the cartridge 1 and 2. You are recommended to wear gloves and goggles.

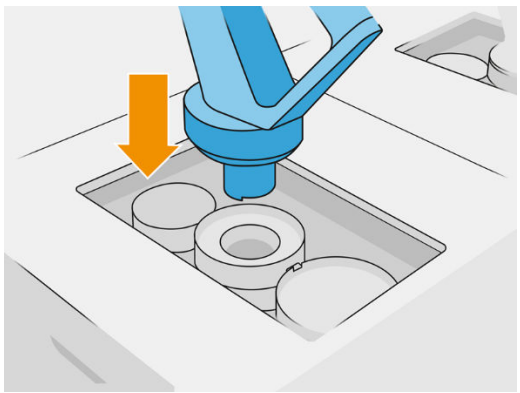

9. Tap **Finish and check** on the front panel.

300 liter cartridge: Swap the material connector

When running out of material on one connector, you can swap it for a full one. Number 1 can be replaced by 3 and 2 by 4.

1. At the processing station's front panel, tap , then **Fresh material** > **Replace**.
2. Disconnect the material cartridge connector from the used material supply.

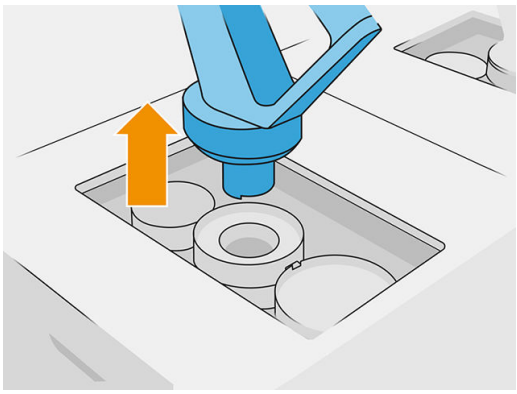

3. Remove the cardboard and seal from the rear and front spouts.

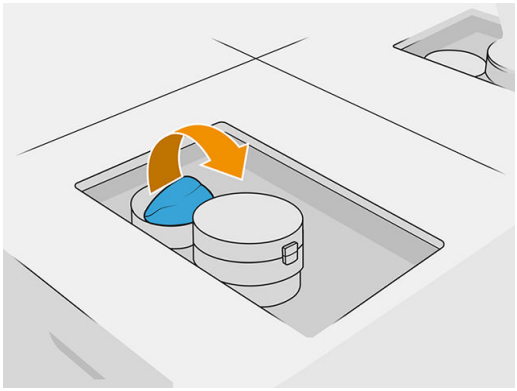

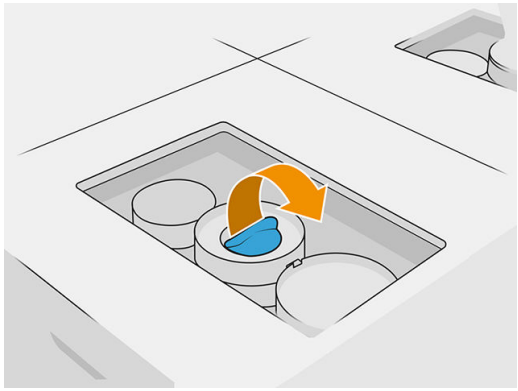

4. Connect the material cartridge connector to the new material cartridge.

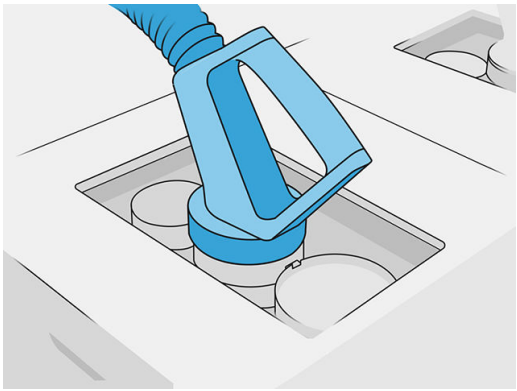

5. Tap **Finish and check** on the front panel.

Bulk material supply (4210B only)

IMPORTANT: Do not use material loading tanks with other material cartridges connected at the same time.

Ensure that any new material loading tank contains the same material type that is in use in the processing station.

1. At the processing station's front panel, tap , then **Fresh material** > **Replace**.
2. Disconnect the material loading tank connector from the lid, and hang it on the structure.
3. Remove the empty material loading tank to be replaced.

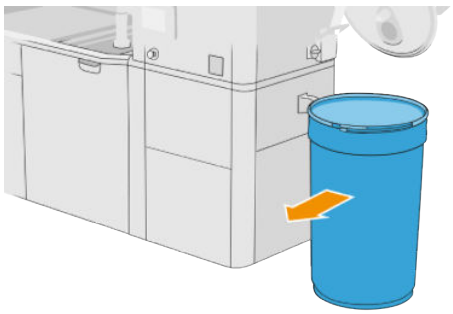

4. Use a lift trolley to move the full material loading tank next to the external tank.

NOTE: If the material loading tank has been stored for some time before use, HP recommends using a drum rotator to rotate it in order to uncompact it. For this operation, the storage lid must be used (not the loading lid) and properly closed with the clamp. The number of turns to uncompact the material depends on the material and on the level of compaction; however, in general 90 seconds at 20 rpm should be enough. If you take no material from the material loading tank for some time, you may need to use the drum rotator again.

CAUTION: If you use a drum rotator, take care that it does not rub against the base or the cover of the material loading tank while rotating.

5. Connect the material loading tank connector to the lid.

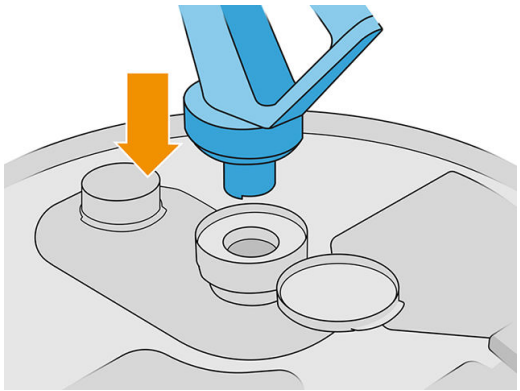

NOTE: HP recommends using tanks in the same order in which they were filled from the bulk material supply.

6. Connect the static earthing clamps from one material loading tank lid to the other.

NOTE: If you are using only one material loading tank, connect it to the external tank lid.

The customer is responsible for tracking bulk material usage and material loading tank contents.

You should maintain logs that, at minimum, track the history of the bulk material received (part number, lot number, expiration date, and so on). In addition, each material loading tank requires identification of the bulk material details (part number, lot number, expiration, fill sequence) and any other relevant remarks (such as date of filling). The material loading tank details should be placed in a visible area.

Fill the material loading tanks from the bulk material supply

The recommended method is to create your own infrastructure to transfer the material according to the requirements of the material. Check the form in which the material supply arrives, and its requirements.

CAUTION: It is important to transfer only material into the processing station. Your own infrastructure must protect against the suction of small parts into the processing station, which can cause safety risks and malfunctions.

You can connect a material loading tank to the processing station: it is capable of transferring the material. At the front panel, tap , then **Fresh material** > **Offload**.

IMPORTANT: Ensure that the material type in the bulk supply is the same as the material currently loaded in the processing station.

Ensure that the material loading tank does not contain any other material type.

If you want to change to a different type of material, first clean the inside of the tank with an explosion-protected vacuum cleaner (do not use cleaning products). Also clean the pipe thoroughly, removing all material.

1. Remove the clamp, the tap, and the rubber from the top of the processing station.

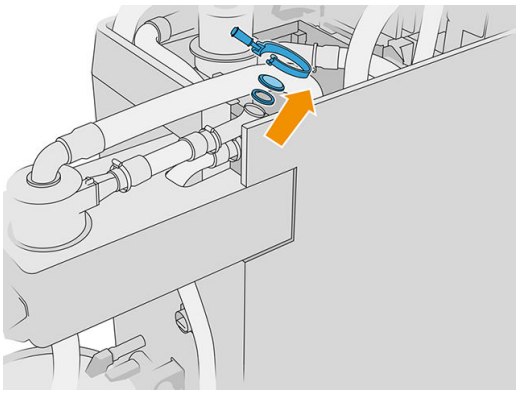

2. Connect the tube from the external equipment and close it with the clamp.

IMPORTANT: Do not forget the rubber.

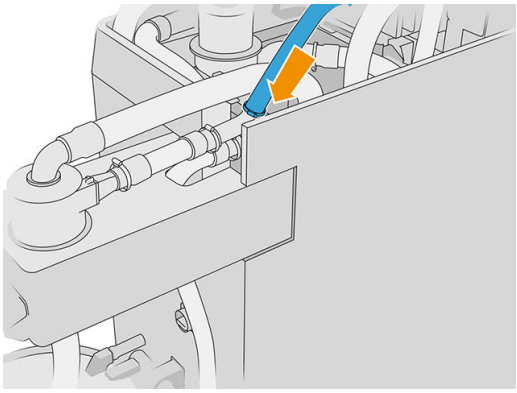

3. Use a multimeter to measure the continuity between the processing station structure and the external equipment structure. The measurement should be less than 100 Ω.

IMPORTANT: The processing station and the external equipment should both be disconnected from the mains supply before the measurement.

4. If you have a material loading tank or overflow connected, remove it.
5. Place an empty material loading tank and close the lid.

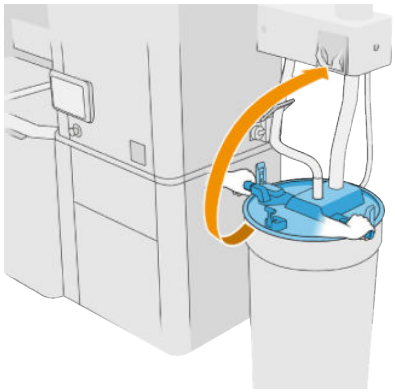

TIP: When closing the lid, if you find that it interferes with one of the blades inside the material loading tank, rotate the material loading tank on its axis by about 60° and try again; do not turn the lid.

6. Tap **Continue** on the front panel to fill the material loading tank. The process will stop automatically once the material loading tank is full.
7. If you want to fill more material loading tanks, declare that in the front panel and replace the full material loading tank by an empty one.
8. At the end, make sure the part of the tube coming from the external equipment and the bulk supply is not in contact with the material and tap **Continue** on the front panel. Processing will extract the material remaining in the tube.
9. Disconnect the tube from the top of the processing station and put back the rubber, tap, and clamp.
10. Place the external tank.

It is the responsibility of the owner to maintain records of material batch information and usage.

- Identify each tank with product number, batch number, and warranty/expiration date. Do not use materials after their expiration date has passed.
- In order to ensure the traceability of fresh material, be sure that the material loading tank is empty of material from previous batches before the refill operation.
- If you also need to ensure the traceability of recycled material, you will need to empty all the build units and processing stations that will work with the new material batch, using the Clean Workflow and installing an empty overflow tank when starting. Otherwise the recycled material will have a random composition of material coming from previous batches.
- Bulk supply must be stored and handled following the HP guidelines applicable to that specific material.
- Not following these traceability practices can invalidate claims against the warranty of the equipment or consumables.

Material cartridge troubleshooting

1. Check that the cartridge is designed for your printer.
2. Use the correct procedure to change cartridges, through the front panel.

3. Check that there is no obstruction in the cartridge connector.
4. Check that the cartridge is correctly oriented (compare with another cartridge).
5. Ensure that you have inserted the connector correctly and fully. You should hear a click.
6. If the problem still remains, call your support representative.

Maintain the cartridges

Before use, the material must acclimatize to the environmental conditions of the room for at least two days.

During the normal lifetime of a cartridge, no specific maintenance is required. However, to maintain the highest quality, replace a cartridge when it reaches its expiration date. An alert notifies you when any cartridge reaches its expiration date.

Store the cartridges

Cartridges should be stored according to cartridge specifications. Before use, a cartridge should be kept at processing-station environmental conditions for at least 2 days.

⚠ CAUTION: HP recommends storing only sealed cartridges. Cartridges are not designed for storing material after removing the seal, and storing an opened cartridge containing material can render the material unusable and cause safety hazards, such as a cloud of material if dropped. Depending on the material, it can be sensitive to temperature, humidity, or other factors. Using cartridges under uncontrolled conditions can affect the functionality of the equipment or severely damage it.

Storage and build unit

⚠ CAUTION: HP recommends not to store material in the build unit for long time periods (>1-2 weeks approx.).

Storage and external tanks

When unpacking, all reused material is stored in the storage tank until it is full. After that, the reused material is stored in the external tank. The mixer is fed with fresh material from the material cartridge and reused material from the storage tank. If the storage tank is empty, you can fill it from the external tank by going to the front panel and tapping , then **Reused material** > **Fill**. You will be asked to follow these steps:

1. Unlatch and open the lid.

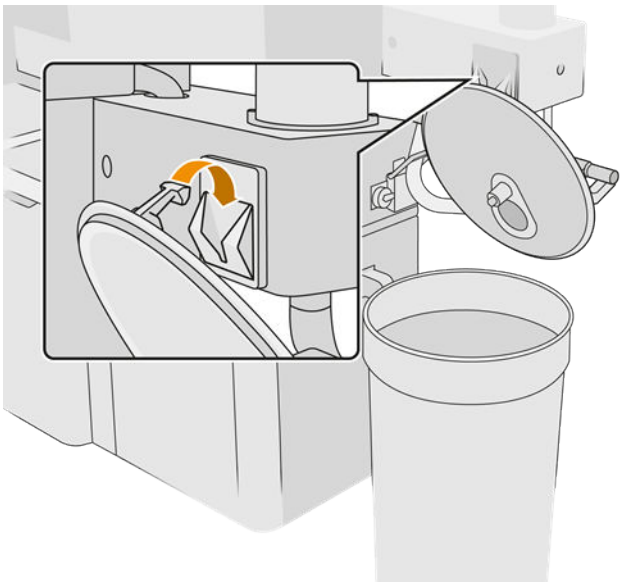

2. Connect the external tank collector and pipe. You are recommended to wear gloves and goggles.

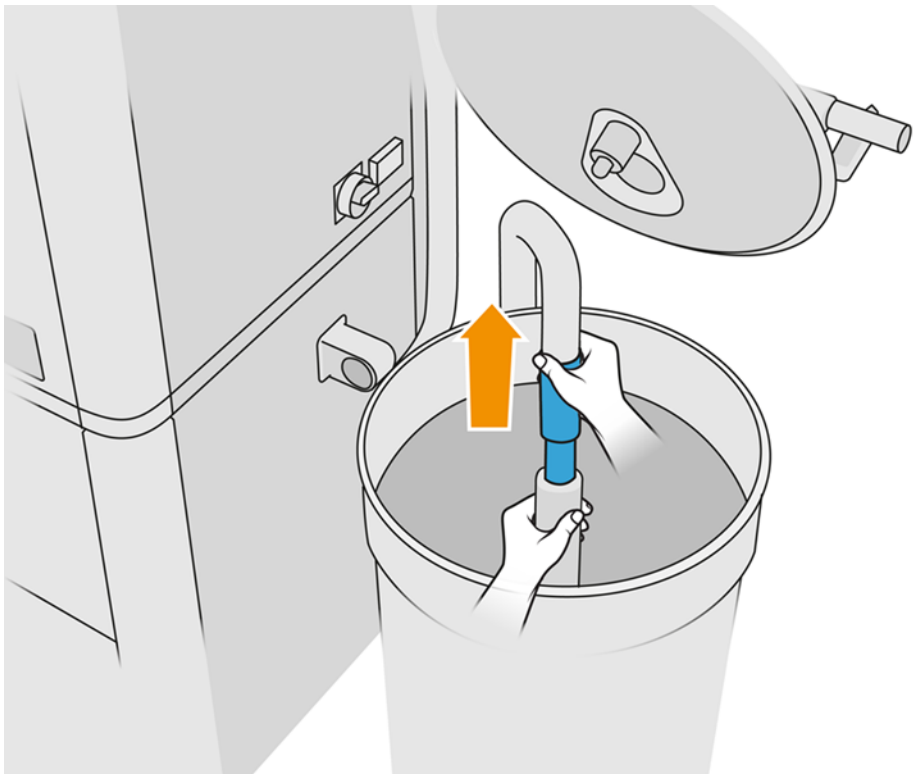

3. The pipe sucks up material in its immediate vicinity. If you leave it in one position, it will consume all the material in that area, while there is still material elsewhere in the tank. You should therefore move the pipe around in the tank to access all the available material.

NOTE: You can insert the pipe with the vacuum switched off, if you like.

4. The process ends when the storage tank is full or the external tank is empty, whichever happens first.
5. Unplug the external tank collector.
6. Close the lid and latches.

If you are loading material into the build unit, but there is not enough reused material in the storage tank to process the job as specified, the front panel will ask you to fill it from the external tank. In this case, only the reused material needed to load the build unit will be transferred.

If both tanks are full, or there is not enough space for unpacking, the processing station will ask you to replace the external tank when the build unit is inserted.

CAUTION: Use HP-certified external tanks only. The use of third-party external tanks can cause safety risks, material leakages, and malfunctions in the processing station; and may affect your system warranty.

Replacement

▲ See Replace the external tank on page 204.

How to recycle supplies

NOTICE: Parts and waste generated during the printing process should be disposed of in compliance with federal, state, and local regulations. Consult your local authorities to determine the correct manner in which to dispose of wastes. It may be possible to recycle printed parts for non-3D uses. Where appropriate it is recommended that the parts be marked with the applicable plastic marking code according to ISO 11469 to encourage recycling.

HP provides many free and convenient ways to recycle your used HP cartridges and other supplies. For information about these HP programs, see http://www.hp.com/recycle/.

The following supplies for your printer can be recycled through the HP supplies recycling program:

- HP printheads

High-volume 3-liter cartridges should be disposed of by following the instructions on the cartridge packaging. The agent bag should be removed and disposed of in compliance with federal, state, and local regulations. The other cartridge parts (plastic retainer and packaging box) can be recycled through commonly available recycling programs.

Dispose of the following supplies in compliance with federal, state, and local regulations:

- Material cartridges

  For further information about recycling cartridges, see http://www.hp.com/go/jetfusion3Dprocessingstation/recycle.

- Printhead cleaning roll
- Lamps
- Filters

HP recommends that you wear gloves while handling printer supplies.

7 Design and printing guidelines

- Introduction
- File preparation
  - Tessellation
- Minimum specification for parts

Introduction

A print job can be created in either of the following ways:

- By using the HP SmartStream 3D Build Manager

NOTE: HP SmartStream 3D Build Manager supports STL and 3MF files.

- By using plugins added to Netfabb and Materialise Magics

The software creates slices that the printer can convert to layers in order to prepare the job. This preparation process may take from 15 minutes to 2 hours depending on the complexity of the job. It can be done while printing other jobs. Once ready, you can select the job to be printed from the job queue on the printer's front panel. If an error occurs while processing, a message appears on the front panel, and the printer cancels the job. To retry, you have to resubmit the job.

The rest of this chapter may help you to avoid such errors.

File preparation

Tessellation

Before sending a job to a 3D printer, the model to be printed needs to be tessellated. That means that its geometry needs to be converted into triangles, which are used by the printer to create layers. It is very important to pay attention to this step: if not done correctly, it can cause problems such as inaccuracy or slow processing.

Standard formats in the additive manufacturing industry include 3MF (with more information about the model) and STL.

A normal file size for a model is about 1–30 MB, but the size depends on the type of software that created it, the number of triangles, the number and level of details, and so on.

When exporting to STL in a CAD package, you are often required to introduce some parameters such as angle tolerance and deviation chord height. These parameters define the resolution and file size of the part. The following tips may help you to export with the best surface to file size ratio.

Solid Designer settings

Save as STL, click **Options**, and check the ASCII option. The recommended values for the Distance and Angle box are `0.05` and `1`.

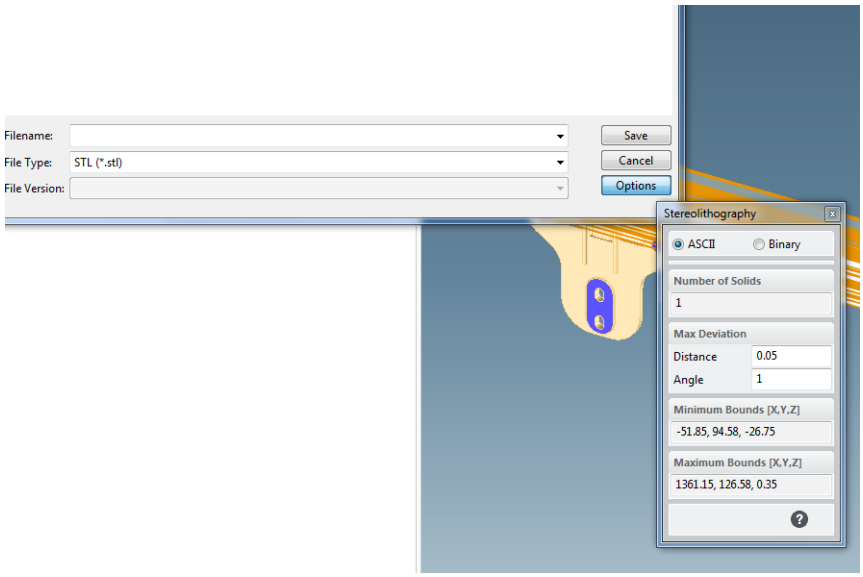

SolidWorks settings

1. Click **File** > **Save As**.
2. Select **STL (*.stl)** as the file type.
3. Click **Options**.
4. Choose the **Binary** option. Binary files are smaller than ASCII files for the same tessellation.
5. Choose **Custom** resolution.
6. Set the deviation tolerance to 0.05 mm.
7. Set the angle tolerance to 1°.

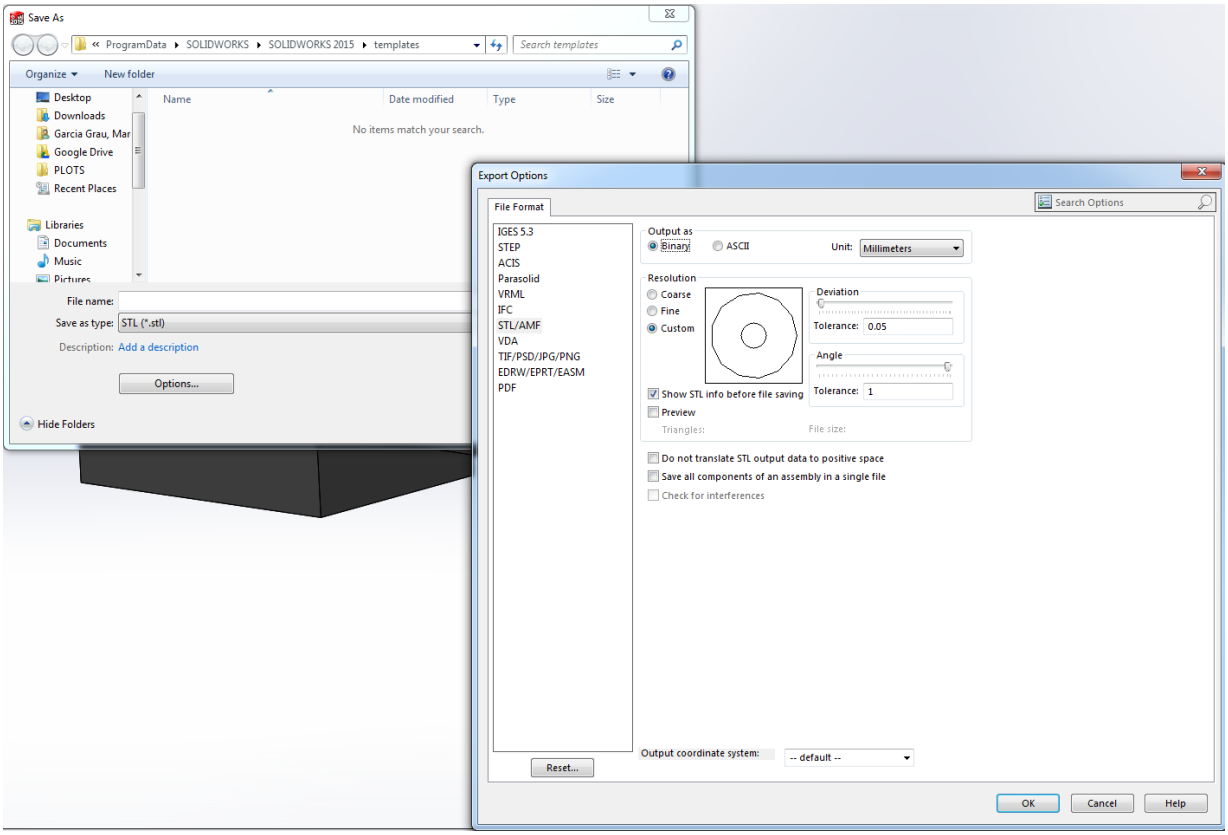

Rhinoceros settings

1. Click **File** > **Save As**.
2. Select **STL (*.stl)** as the file type.
3. Click **File Name** > **Save**.
4. Select **Binary**.
5. Select **Detail Controls** from the Mesh Options.
6. Set the maximum angle to 1, the maximum aspect ratio to 6, and the minimum edge length to 0.05.

STL problems

- Too many or too few triangles

Too many triangles are difficult to process and, when a certain size is reached, the extra triangles do not provide any further accuracy. For this reason, an excess of triangles could increase processing time for no benefit.

Triangulation of a surface causes faceting of the 3D model. The parameters used to output an STL model affect how much faceting occurs.

Example of tessellation

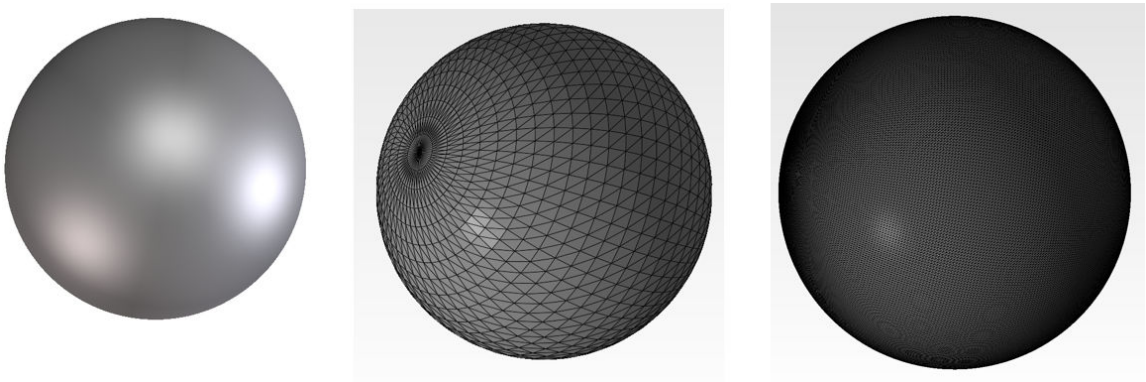

- Holes in triangles

  STL models commonly suffer from surfaces that are not joined to their neighbors, and missing surfaces.

Repairing STL files

STL-repairing software

- Magics – Materialise
- Netfabb
- HP SmartStream 3D Build Manager

Common errors in STL files

- Triangles not joined

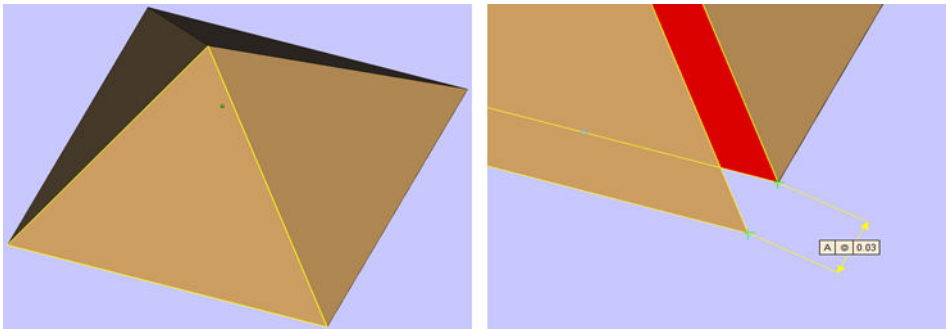

- Overlapping triangles

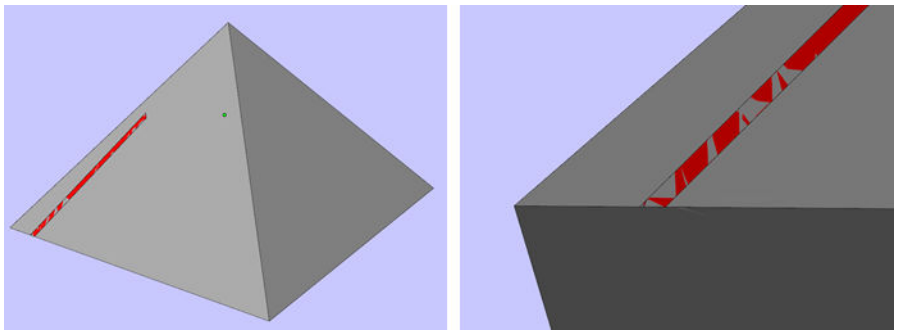

- Holes in parts

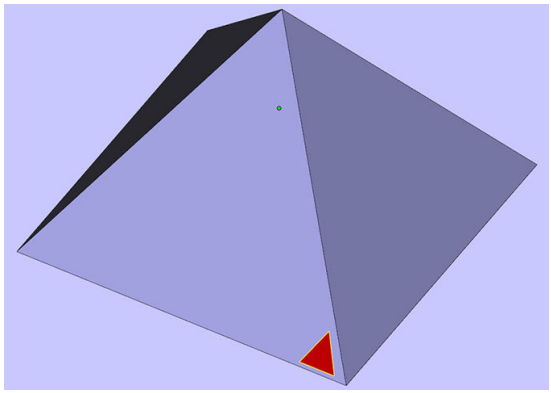

- Flipped-direction triangles

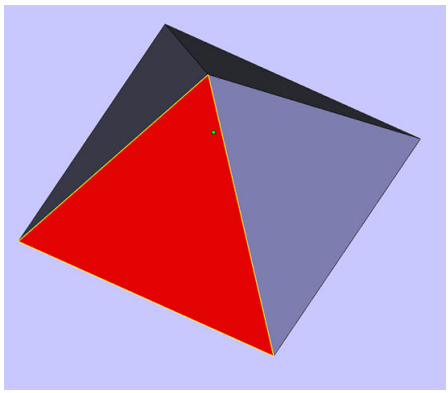

- Tiny shells

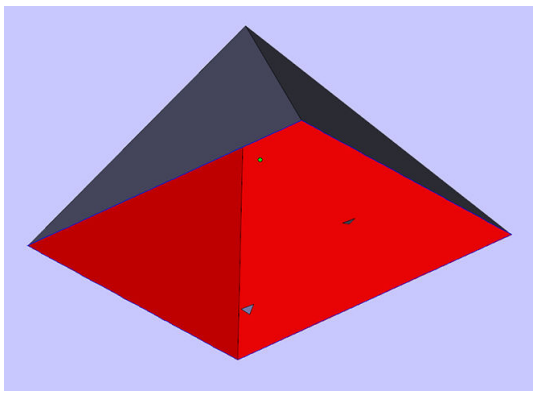

Minimum specification for parts

There are some specifications to bear in mind in order to avoid issues in parts, and to achieve the best quality. The minimum printable features in planes X, Y, and Z are as follows:

Minimum hole diameter at 1 mm thickness	0.5 mm
Minimum shaft diameter at 10 mm height	0.5 mm
Minimum printable font size for embossed or debossed letters or numbers	6 pt
Minimum clearance at 1 mm thickness	0.5 mm
Minimum slit between walls	0.5 mm

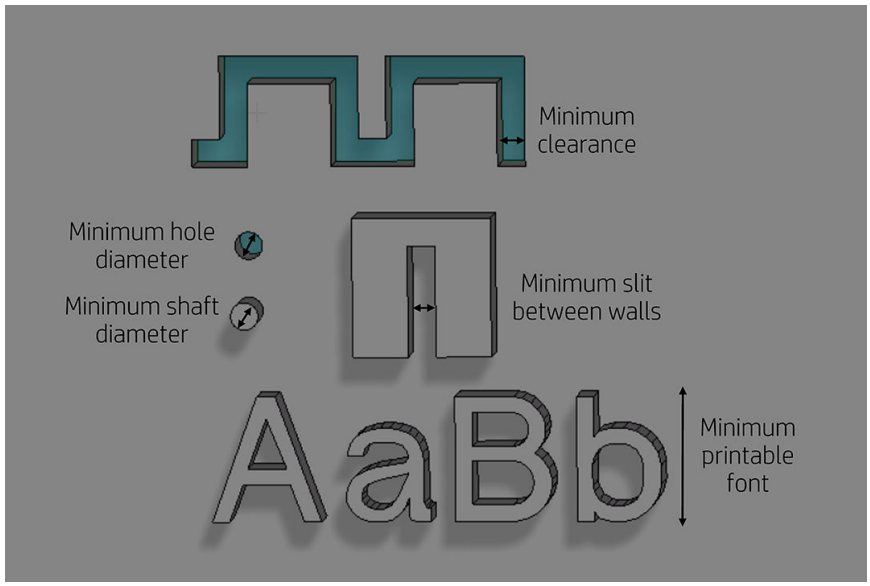

8 Load material into the build unit

- Loading procedure
- Change to a different type of material

Loading procedure

1. Ensure that the build unit is located on the processing station.
2. Ensure that the build unit printing platform is clean.
3. If you want to change the mix ratio, HP recommends cleaning the build unit first. See Clean the build unit on page 213.

NOTE: If you do not clean the build unit, it will contain some remaining material with the previous mix ratio. In fact, some of the previous material may remain even after cleaning, so you may prefer to use a different build unit. Check the material compatibility specifications.

The default and recommended mix ratio for HP and Certified Polyamide 12 material is 20% fresh and 80% reused; for HP and Certified Polyamide 11 it is 30% fresh and 70% reused. In some exceptional cases you may want to change this ratio; for example, when using the processing station for the first time you may need to use 100% fresh material.

4. If you want to change to a different type of material, you should first clean and purge the processing station. See Purge the processing station on page 198. Then see Change to a different type of material on page 75.

NOTE: If you do not intend to change the type of material, you may sometimes decide to clean the processing station without purging it, perhaps because you think there is a problem with the particular material that you have been using. See Clean the processing station on page 196.

CAUTION: A small amount of material may remain after cleaning. If your new material cannot tolerate any contamination at all, you should use a different processing station.

5. Ensure that the material cartridges are loaded.
6. At the front panel, tap **Build unit** > **Load**.
7. Clean the sieve when requested by the front panel. See Clean the sieve on page 187.
8. Clean the loading nozzle sensor. See Clean the loading nozzle sensor on page 188.
9. Ensure the material loading inlet is properly clean.
10. Open the lid of the material loading inlet of the build unit.

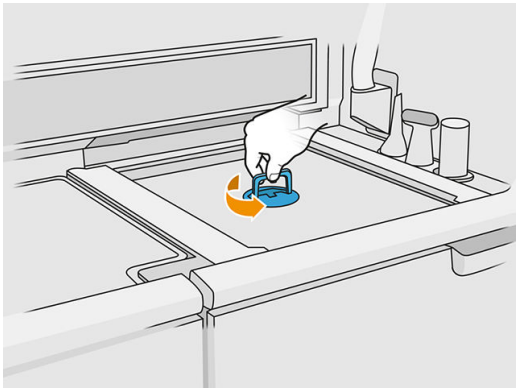

11. Attach the material loading nozzle.

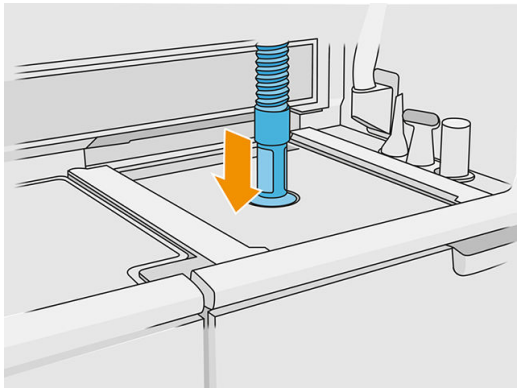

12. Define the height by scrolling up and down the right bar. You can change the mix ratio if required.

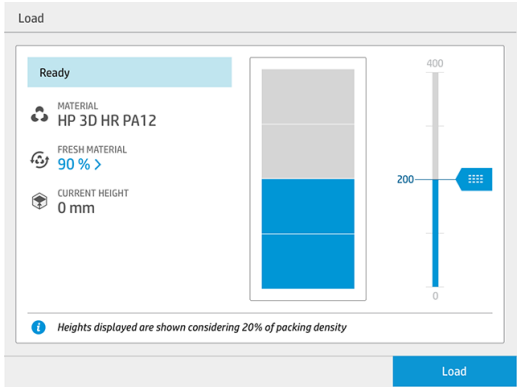

The loading time depends on the mix ratio used and the quantity to load; here are some approximate examples:

	100% fresh material	80% recycled, 20% fresh
Full chamber	20 min	60–90 min
75% full	15 min	45–70 min
50% full	10 min	30–45 min
25% full	5 min	15–25 min

NOTE: The percentage full assumes a 20% packing density.

13. Tap **Load** to continue.

14. If the external laser tool is provided with your system and internal measurement seems to not work for any reason, you can use the tool. To use it, attach the laser tool to the material loading inlet, use the lever to turn on the laser tool and wait until the reading is done.

15. Tap **Start**.

NOTE: To fill the build unit completely with a mix ratio of 80% recycled, 20% fresh, you may need to do it in two steps.

16. The supply container of the unit is filled. Wait for front panel to report that it has been successfully loaded.

17. Detach the material loading nozzle and leave it in parking position.

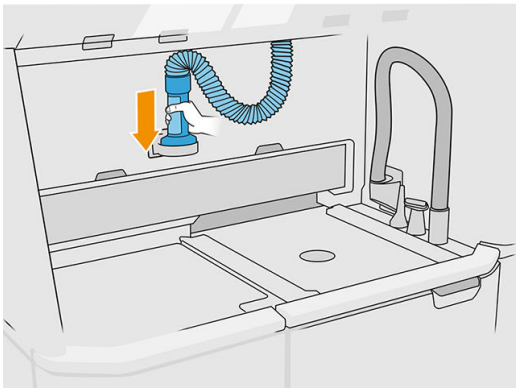

18. Close the material loading inlet.

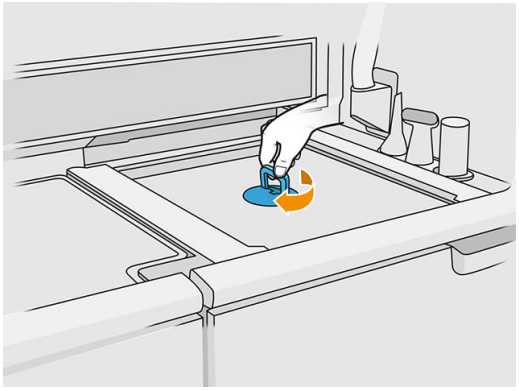

19. Extract the build unit from the processing station by pulling the handle, put the safety lid on top of the build unit, and move it to the printer.

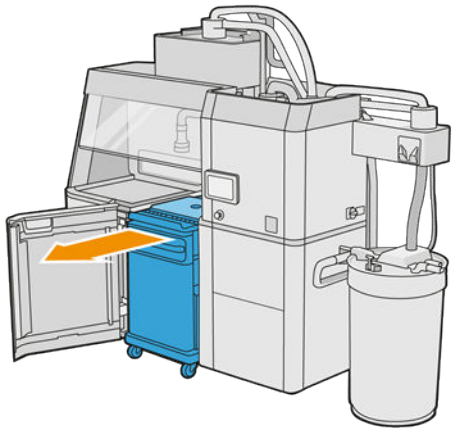

20. Open the printer door.

21. Remove the lid of the build unit.

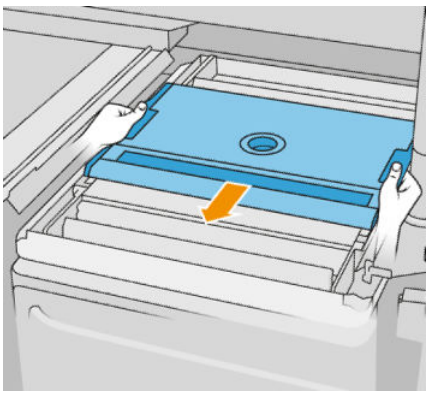

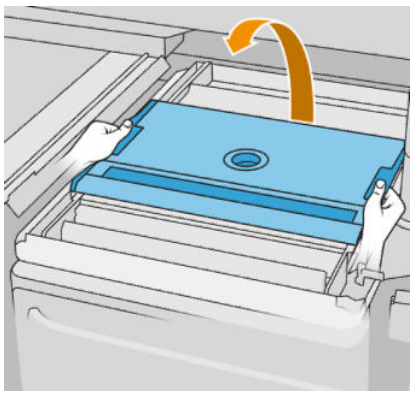

22. Insert the build unit by pushing the handles.

23. Close the printer door.

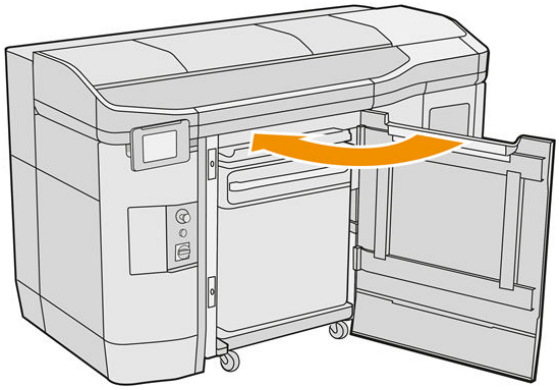

Change to a different type of material

The processing station stores and moves the material from the cartridges to the build unit. To completely remove all material particles from the loading path may be difficult. Therefore, depending on the compatibility of the materials, when changing from one material to another some special procedures may be needed. Check the compatibility chart on the webpage and follow the procedures below depending on the compatibility grade.

Download the material package from the HP webpage to a USB flash drive, connect it to the processing station, and then to the printer. At the processing station's front panel, tap , then **Settings** > **Change material**.

Grade 1: Light cleaning

Perform the following operations:

- Check and clean the interior of the build unit on page 77
- Clean the processing station on page 196
- Weekly printer maintenance: see Printer maintenance on page 101

Grade 2: Deep cleaning and material purge

Perform the following operations:

- Check and clean the interior of the build unit on page 77
- Clean the processing station on page 196
- Purge the processing station on page 198

NOTE: You will need two cartridges of the new material, to be used for purging.

For the printer, follow these steps:

1. Turn off the printer (see Turn the printer on and off on page 32).
2. Clean the print zone, carriage, and housing structure on page 106.
3. Clean the inside of the carriage on page 115.
4. Clean the service-station caps on page 122.
5. Clean the top-enclosure fan filters on page 123.
6. Clean the print-zone window on page 140.
7. Clean the quartz glass of the heating lamps on page 125.
8. Clean the scan-axis wipers on page 114.
9. Clean the bottom of the carriage and of the fusing lamps on page 108.
10. Clean the fusing-lamp glasses on page 127.
11. Clean the recoating roller and recoating plates on page 117.
12. Clean the spittoon on page 112.
13. Clean the temperature camera glass on page 110.
14. Turn on the printer (see Turn the printer on and off on page 32).
15. Perform diagnostics:
    a. Calibrate the cooling system.
    b. Finish checking/cleaning the spittoon.
16. Clean the exterior of the printer on page 114.

Grade 3

Contact your support representative.

Check and clean the interior of the build unit

IMPORTANT: All build units to be used with the new material must be clean before starting: see Clean the build unit on page 213.

To make sure that no material is left in the build unit, follow the steps below.

Prepare for cleaning

1. Ensure that you have an explosion-protected vacuum cleaner, an absorbent all-purpose cloth, a flat screwdriver, a Torx 20 screwdriver, and deionized water (these things are not provided by HP).
2. You are recommended to wear gloves, goggles, and mask.

Check and clean the interior of the build unit

1. Locate the material window lid.

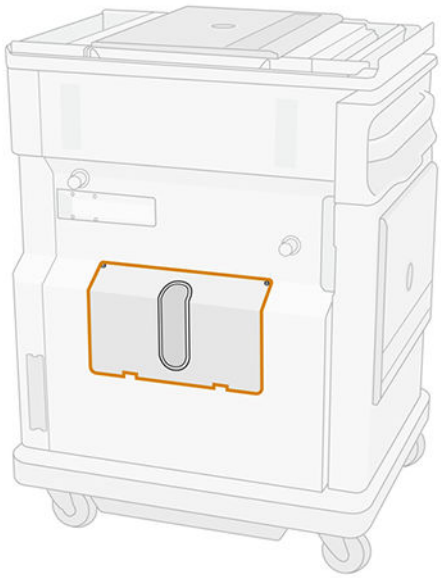

NOTE: Some machines do not feature a window.

2. Remove the two Torx 20 screws from the material window lid.

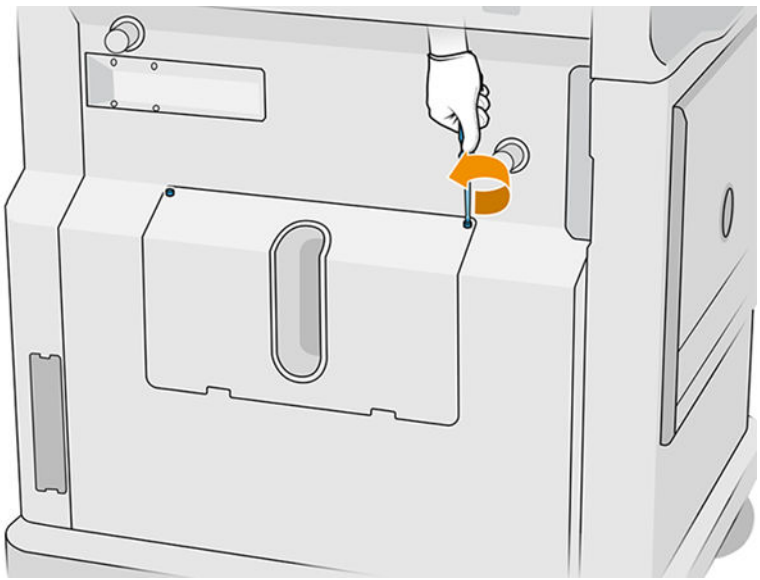

3. Loosen the four captive flat screws.

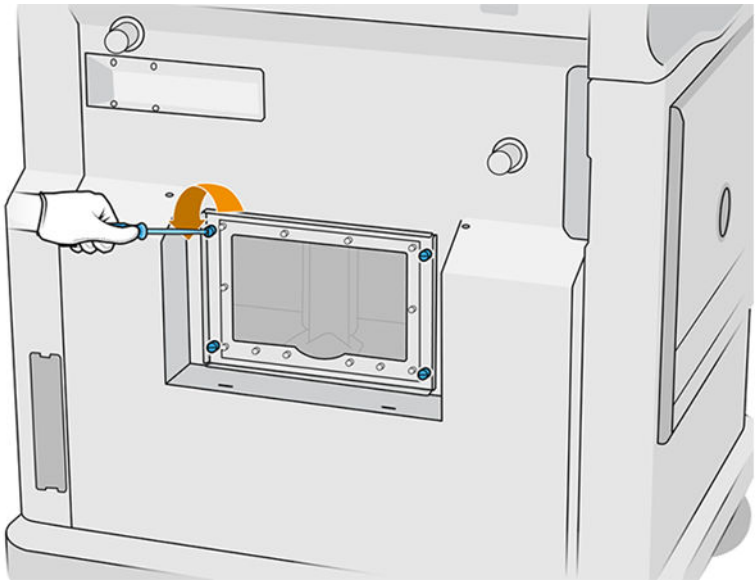

4. Remove the window.

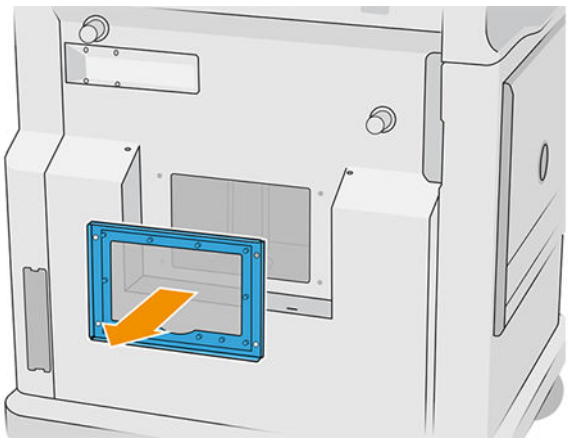

5. Check the interior of the build unit and use the explosion-protected vacuum cleaner, if needed, to remove the remaining material. Check the areas indicated below in particular:

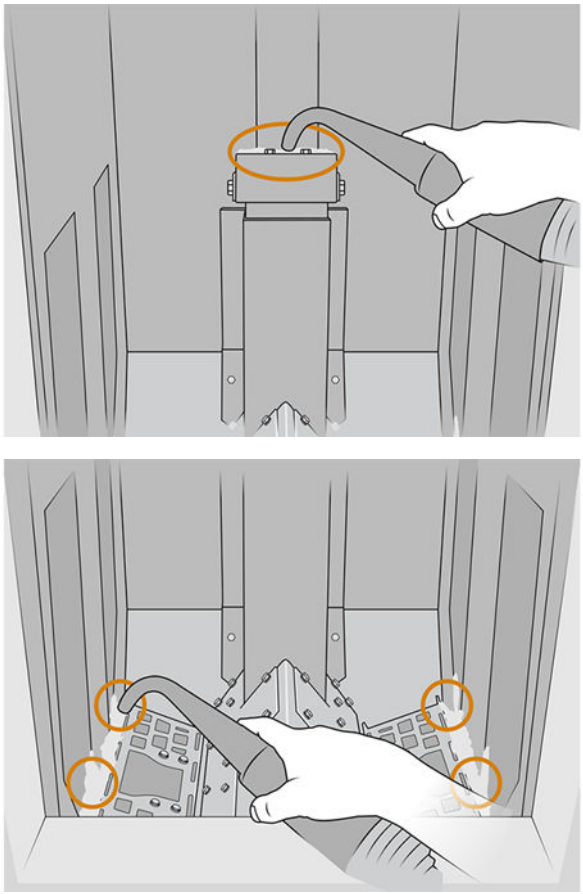

Finish cleaning

1. Tighten the four captive flat screws.

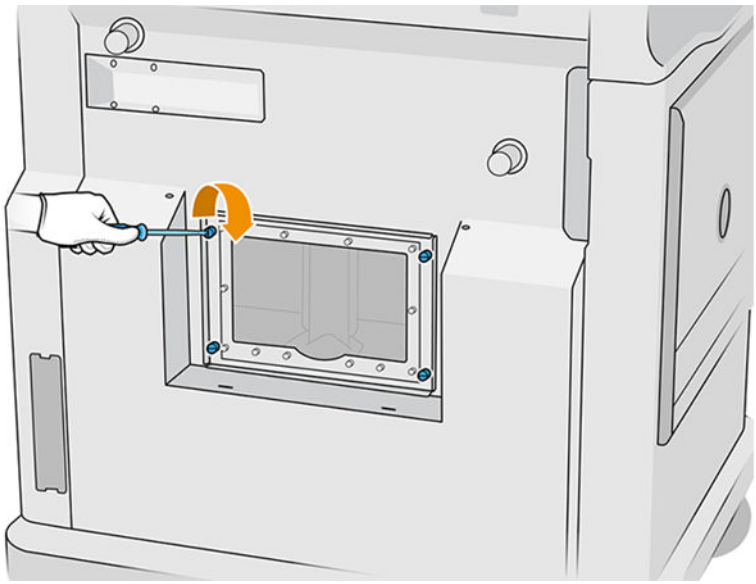

2. Put back and tighten the two Torx 20 screws.

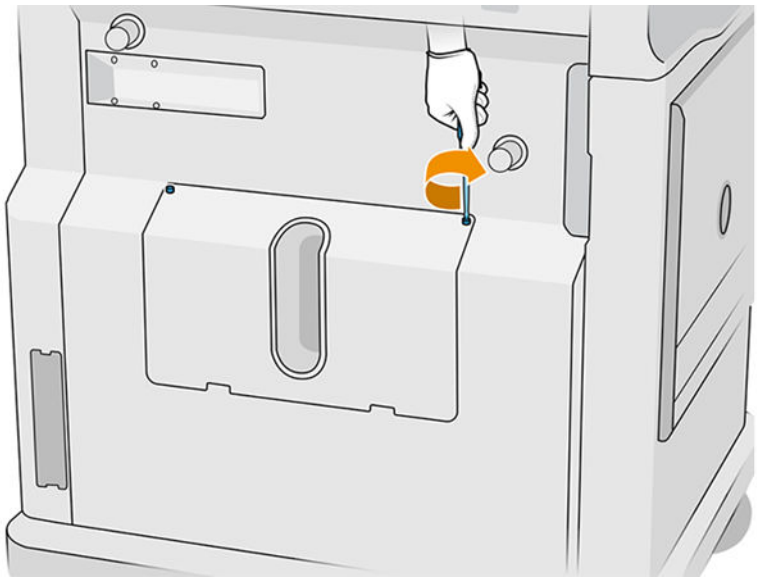

3. Vacuum the area below the cap of the build unit's loading inlet.

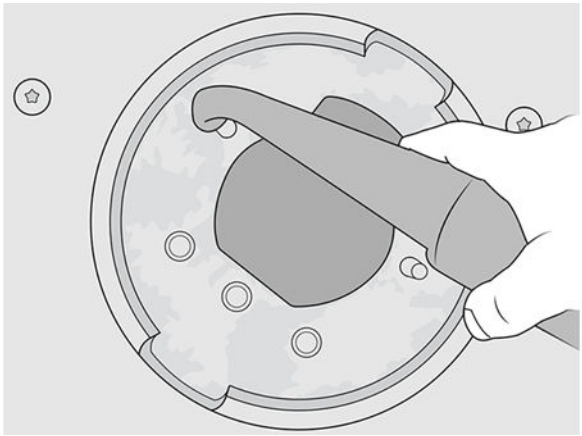

9 Print

- Job list app
- Send a job to be printed
- Select a job to be printed
- Add job while printing (4210 only)
- Cancel a job
- Check status on the front panel
- Check status remotely
- Possible errors while printing
- Print modes

Job list app

The job list app in the printer's front panel displays the status of all jobs. Possible statuses are:

- **Waiting to process**
- **Processing**
- **Processed**: The job is ready to be sent for printing. Either it has never been printed, or it is ready for reprinting.
- **Sent to print**: The job has started printing.

Send a job to be printed

Before sending a print job, make sure that you have done at least the required daily maintenance tasks. See Hardware maintenance on page 93.

Make sure you have the build unit filled with the correct material and in the printer. See Load material into the build unit on page 71.

Use the HP SmartStream 3D Build Manager to send the job to the printer. See the *HP SmartStream 3D Build Manager User Guide*.

Select a job to be printed

1. At the printer's front panel, tap **Jobs** on the home screen.

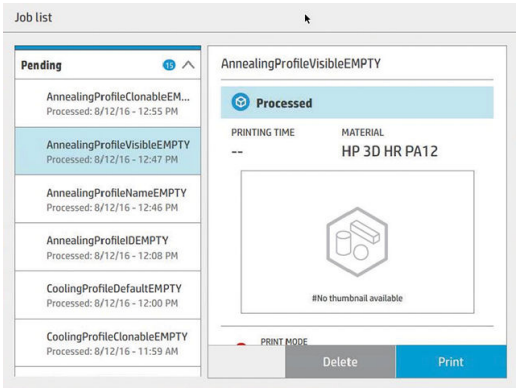

2. If the build unit has not been inserted, open the door and insert the build unit by pushing the handles.
3. Select the processed job and tap **Print**.
4. The printer checks that all subsystems and supplies are ready to complete the build. If one of them is not ready, the printer notifies and advises you: a notification appears in the job details with an accessible summary of any issues. If necessary, correct the issue(s) and resend the job for printing.
5. The printer starts the printing process. Wait until the printer tells you that the process is complete, then remove the build unit.

Add job while printing (4210 only)

If you have available space in the build unit and enough material, you can add a job to be printed while the previous job is still being printed.

To do so, select the job to be printed and tap **Add**. The printer checks whether it can be added, and adds it if feasible.

On the **Jobs** page, the **FINISH** line shows the total time to finish the currently printing job and the following jobs in the queue. It is updated whenever a job is added or removed.

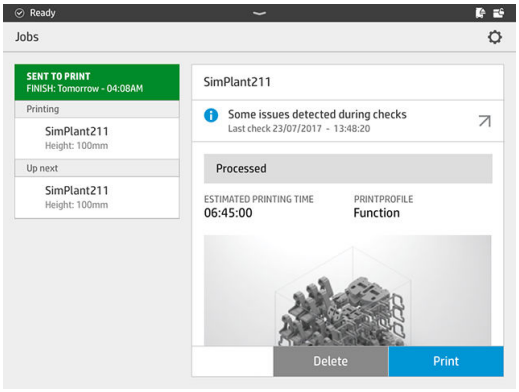

NOTE: When adding a job to the queue, the button at the bottom of the page becomes **Remove**, allowing you to remove the job from the queue and return it to its initial location.

When you add a job while printing, sacrifice layers are added between jobs; see diagram below.

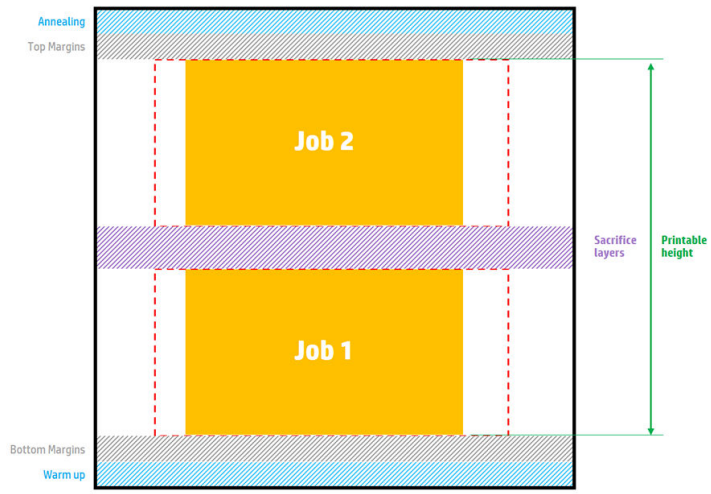

Available printable height = Printable height – (Job CAD height + Sacrifice layers)

Repeated per job

A job can be added only if there is enough height available for it. Take into account that the height required is the printed height plus the sacrifice layers between jobs.

You cannot add a job while the current job is annealing.

NOTE: Adding a complex job during printing may slow down the processing of the current job, which could cause printing problems.

Cancel a job

If you need to cancel the job while printing, tap **Cancel** and confirm it in the build status app on the printer's home screen. The printer will cancel the job immediately.

IMPORTANT: Wait until the printer tells you it is safe to remove the build unit.

Proceed with the cooling process and unpacking if relevant. If no parts have been printed, the build unit should be cleaned and loaded before using it again.

Check status on the front panel

At the printer's front panel, the build status app on the home screen shows you the status of the build currently being printed.

- Status of the job: A progress bar shows the phase completed. The phases are warming, printing, and annealing (if selected when the job was sent to print).
- Estimated finishing time
- Job name
- Layers printed and layers in total
- Parts printed and parts in total
- Height printed and total height
- Material type

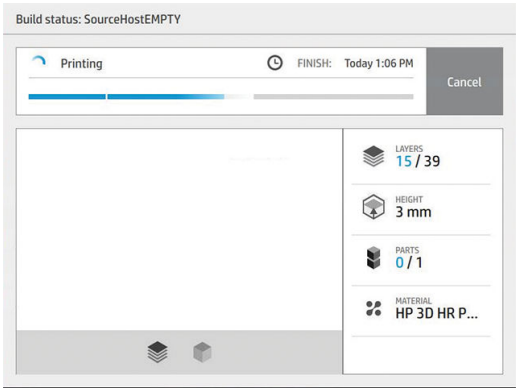

You can select an isometric or section view of the current layer, and you can navigate through layers.

Check status remotely

You can check the job status from the Command Center. See HP SmartStream 3D Command Center on page 25.

Possible errors while printing

- Out of agent
- Out of cleaning roll
- Printhead error
- Broken lamp
- Crash during printing
- Power cut

In the event of an error, the printer cancels the job immediately.

IMPORTANT: Wait until the printer tells you it is safe to remove the build unit.

Proceed with the cooling process and unpacking if relevant. If no parts have been printed, the build unit should be cleaned and loaded before using it again.

Print modes

In the HP SmartStream 3D Build Manager, you can choose one of the following print modes from the print profile drop-down menu, depending on your needs:

- **Balanced mode** delivers balanced properties.
- **Fast mode** maximizes speed for any job; available for certain materials.
- **Mechanical mode** delivers superior strain-resistant properties; available for certain materials.
- **Cosmetic mode** delivers higher accuracy, a smoother surface, and better color uniformity; available for certain materials.

	Balanced PM	Mechanical PM	Fast PM	Cosmetic PM
PA12	X	X	X	X
PA11	X	X	X	
PA12GB	X			

10 Unpack the build

As the build is at a high temperature while printing, you must wait about 30 minutes before extracting the build unit from the printer. Then there is some further cooling time required in order to preserve part quality.

Tips

- Wear high-temperature-resistant gloves.
- Unpack calmly.
- There are physical buttons with which you can raise or lower the printing platform to make the unpacking process more convenient.
- The sides and corners of the build chamber are colder than the center.
- If the parts are large, or the material around the parts seems very hot, leave them aside to cool down.
- If you notice that the vacuum speed slows down, try to unpack material from cooler locations or from cooled parts.

1. When the printer tells you to proceed, open the door, extract the build unit, and place the safety lid over it.
2. Put on heat-resistant gloves and vacuum the top surface of the build unit with an external explosion-protected vacuum cleaner.
3. At this point you can follow the natural cooling process; or, if your processing station is equipped with fast cooling, you can choose fast cooling as an alternative.

Natural cooling

a. Move the build unit aside to cool down further.

⚠ CAUTION: You are recommended to lock the wheels of the build unit while it is outside the printer.

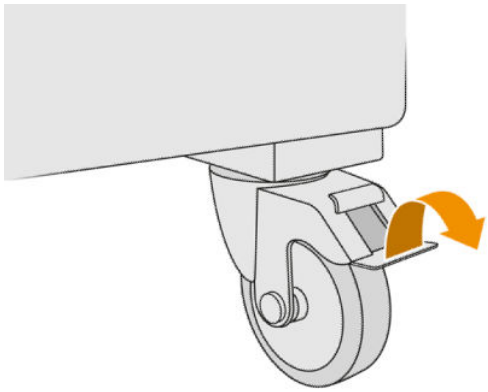

b. Wait. The cooling time depends on the size of the build; see Time scheduling on page 5.

c. Insert the build unit into the processing station.

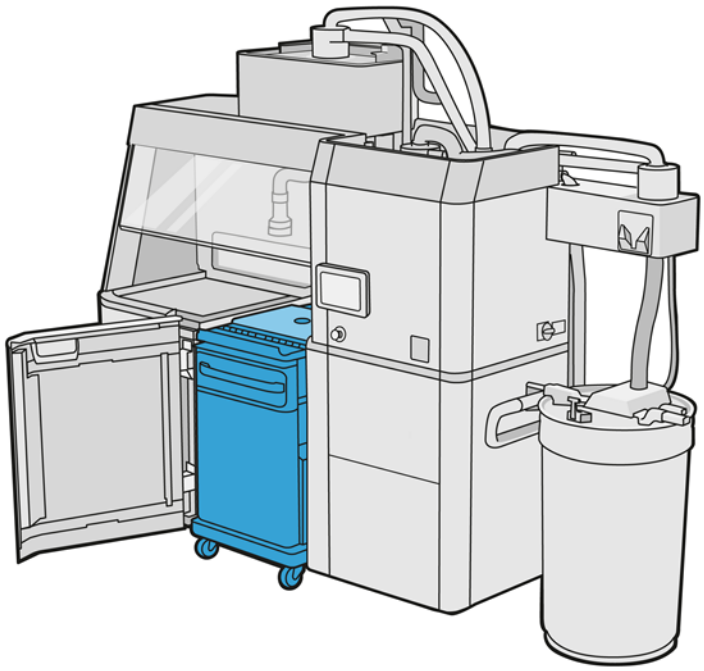

Fast cooling

a. The build unit must be left to cool naturally for 3 or 4 hours before fast cooling can start. It does not need to be inside the processing station during this time.

b. When you have inserted the build unit into the processing station, go to the processing station's front panel and tap **Build unit** > **Fast cooling**.

c. Fast cooling starts. You can tap ✕ at any time to cancel fast cooling. To resume the process, ensure that the build unit is inserted, and tap **Fast cooling**.

Default cooling times for PA12 material

	Fast cooling	Natural cooling (to reach 80°C)
Half-full build chamber (190 mm)	6.9 h	18.4 h
Full build chamber (380 mm)	9.4 h	33.4 h

Before starting the fast cooling process, you can modify the timing by tapping **Modify**.

TIP: **Modify** can be locked so that only administrators can modify the timing.

The timing is changed based on a cooling factor, which is related to speed; it is used to calculate the fast cooling time for different job heights. Modifying this value may compromise part quality.

NOTE: The use of fast cooling may cause less uniformity in part cooling rates, and parts may finish at higher temperatures than with natural cooling.

d. Connect the reusable material collector to the safety lid, and tap **Start** on the front panel, which will tell you the remaining time.

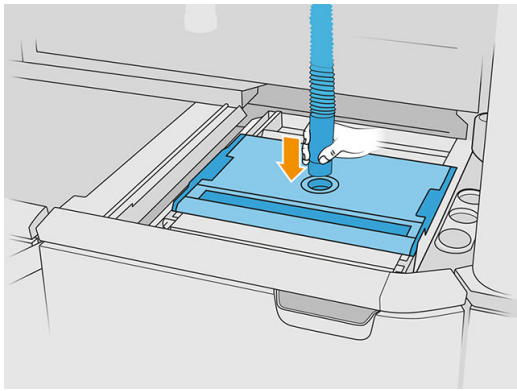

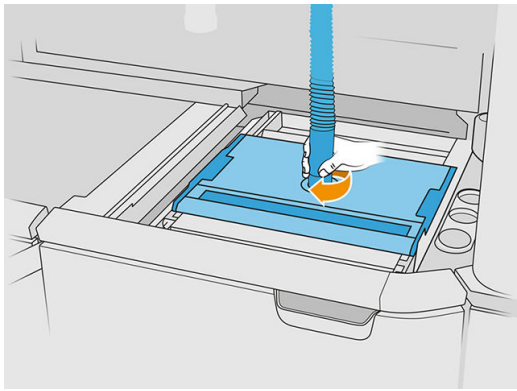

IMPORTANT: Ensure that the reusable material collector is in the high-suction position.

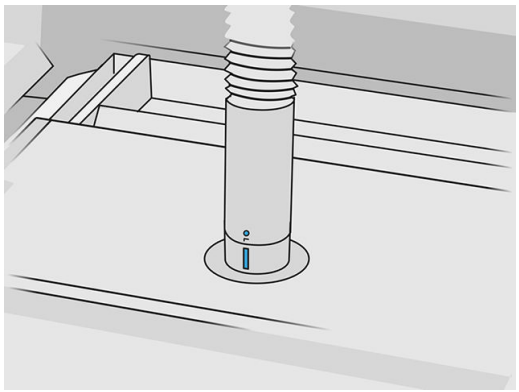

4. When cooling is complete, remove the safety lid and park it on the front of the build unit.

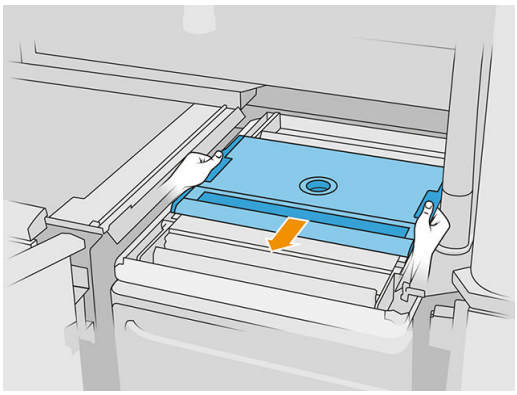

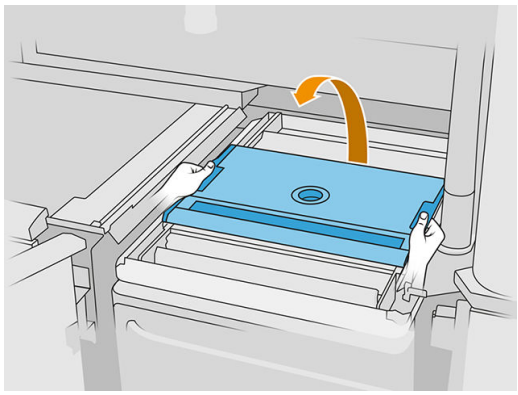

5. Use the build unit app on the processing station's front panel to check that the build is ready for unpacking.
6. At the processing station's front panel, tap **Build unit** > **Unpack** > **Start** to start the unpacking process.

IMPORTANT: The vacuum is activated when you tap **Start**, and the dust extractor is activated to keep the process clean.

CAUTION: Wear heat-resistant gloves.

TIP: Close the hood to improve the performance of the dust extractor.

7. Redeploy the reusable material collector. You can use one of the following nozzles:

   - Crevice nozzle, for cleaning the feed tray and narrow areas
   - Unpacking nozzle, for normal unpacking
   - Fine mesh nozzle, with a 2 mm mesh, for unpacking very small parts
   - Wide nozzle, for cleaning the working area rapidly

   CAUTION: Do not use the wide nozzle to clean the mesh shaker (on the feed trays of the build unit), as you could damage the accessory and leave residues inside.

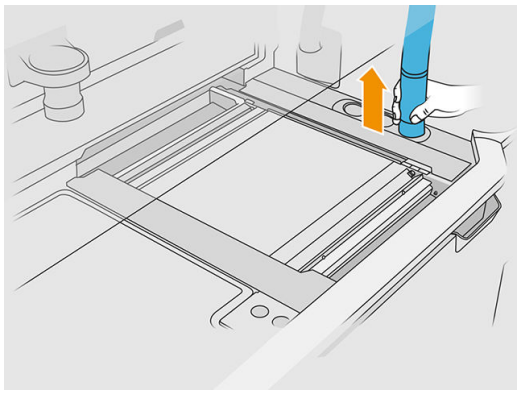

NOTE: You can regulate the suction power by rotating the tip of the material collector hose.

	Low suction		High suction

8. Vacuum the external perimeter of the platform (this step is unnecessary if you have used fast cooling).

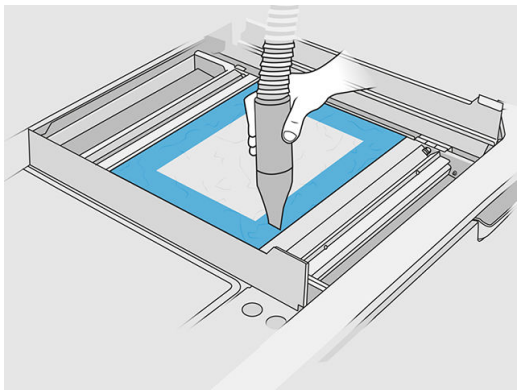

9. Raise the platform by pressing the button.

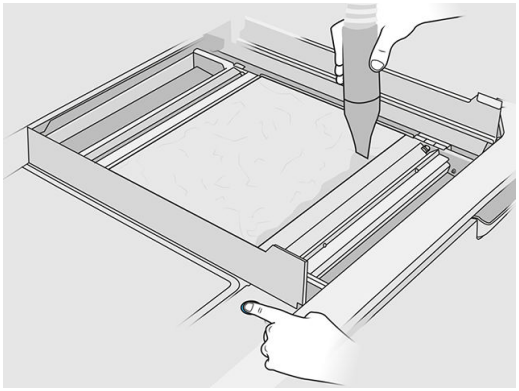

10. Vacuum the build to reveal the parts.

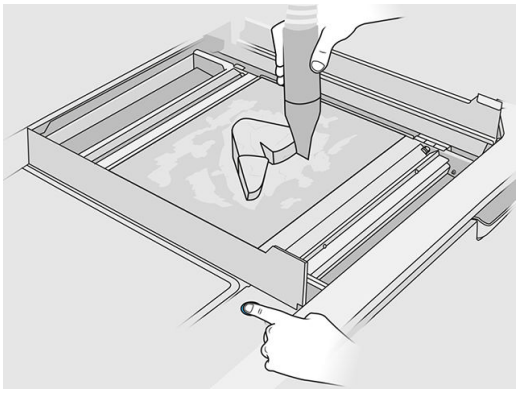

11. Clean each part separately to avoid having big clumps of material covering the part. You don't need to clean every surface thoroughly because:

    - The material that is closest to the part or attached to it may reduce the overall quality of reused material.
    - That material will be removed anyway during sandblasting and postprocessing.

    The example below shows a part that is ready for the bead blast.

Continue until all parts are extracted from the build chamber. Use the physical buttons to lift the platform to reach all parts.

12. After checking that all parts are unpacked, put them in a box and take them to the postprocessing section.

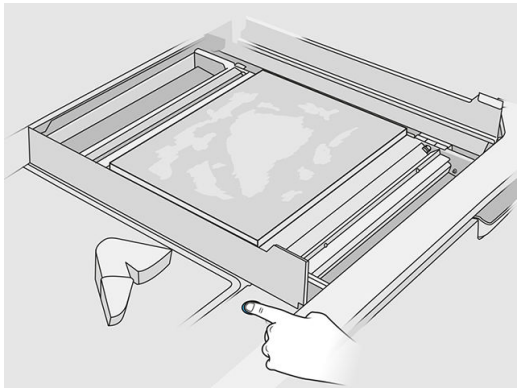

13. Ensure that the printing platform is at its highest position.
14. Vacuum the empty printing platform and feed tray.

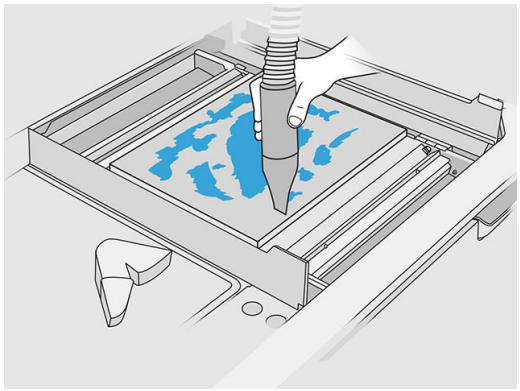

15. Tap **Finish** on the front panel.
16. Clean the surface of the build unit. See Clean the surface of the build unit on page 208.
17. Vacuum the platform control buttons to prevent loose material from blocking them.

11 Part cleaning and postprocessing

Once parts have been unpacked from the build in the processing station, they should be cleaned. There are different processes that can be followed, depending on your needs. In general, you will need equipment not provided by HP. The main process recommended by HP is a combination of bead blasting (first) and air blasting (second).

- Bead blasting consists of applying compressed air mixed with an abrasive to the part in order to remove the attached material. This is a generally appropriate solution; however, you may want to select different abrasives or pressures for specific purposes.
- Air blasting consists of applying compressed air to the part in order to remove any material remaining after bead blasting.

Depending on your specific needs, other postprocessing methods may be suitable for you.

The following options are available to improve surface finishing:

- Tumbling: The part is immersed in a vibro-tumbler full of abrasives, to smooth any surface roughness.
- Hand sanding: The surfaces of the part are smoothed by abrasion with sandpaper.

The following options are available for color-related finishing:

- Bead blasting with other additives consists of applying compressed air mixed with an abrasive and a colored additive to the part in order to achieve homogeneous surface color.
- Dyeing consists of immersing the part in a controlled dyeing bath. All details and cavities of the part can be reached.
- Painting the part with spray can, spray gun, or brush. For specific color finishing, HP recommends applying a primer before painting the part. Repeat the process several times for optimal results.

Other industry-standard postprocessing methods may be used:

- Gluing, bonding, sealing
- Drilling, tapping
- Plating
- Coatings for wear resistance, conductivity, temperature resistance, strength, watertightness, resistance to chemicals, gloss properties, UV protection, and so on

Contact your HP support representative to discuss solutions for your specific needs.

Consult your usual EHS specialist for advice on the appropriate measures for your location depending on the post-processing method you use. Consult your local authorities to determine the correct manner in which to dispose of wastes.

12 Hardware maintenance

⚠ **WARNING!** Hardware maintenance may be performed by trained personnel only. During printer installation, the designated personnel receive training for safe operation and maintenance of the printer. No-one should use the printer without this training.

- Safety precautions
- General cleaning instructions
- Maintenance resources
  - Maintenance kits
  - Kit contents and recommended tools
- Printer maintenance
  - Summary of maintenance operations
  - Maintenance operations
- Processing-station maintenance
  - Summary of maintenance operations
  - Maintenance operations
- Build-unit maintenance
  - Summary of maintenance operations
  - Maintenance operations
- Move or store the product

Safety precautions

Read and follow the safety precautions in this guide to make sure you use the equipment safely: see Safety precautions on page 6.

You are expected to have the appropriate technical training and experience necessary to be aware of hazards to which you may be exposed in performing a task, and to take appropriate measures to minimize the risks to yourself and to others.

General cleaning instructions

For general cleaning, a lint-free cloth dampened with distilled water is recommended. Allow to dry or use a cloth to dry the cleaned part completely.

Do not spray fluids directly on the HP product. Spray the fluid on the cloth used for cleaning.

To remove stubborn dirt or stains, moisten a soft cloth with water and a neutral detergent, or general-purpose industrial cleaner (e.g. Simple Green industrial cleaner). Remove any remaining soap foam with a dry cloth.

For glass surfaces, is recommended to use a soft, lint-free cloth lightly moistened with a non-abrasive glass cleaner or with general purpose glass cleaner (e.g. Simple green glass cleaner). Remove any remaining soap foam with a lint-free cloth dampened with distilled water and dry it with a dry cloth to prevent spotting.

CAUTION: Do not use abrasives, acetone, benzene, sodium hydroxide, or carbon tetrachloride on the glass as they can damage it. Do not place or spray liquid directly on the glass, the liquid might seep under the glass and damage the device.

Is recommended to use a canister of compressed air to remove dust from electronic/electrical parts.

CAUTION: Do not use water-based cleaners for parts with electrical contacts, it may damage electrical circuits.

NOTE: Do not use wax, alcohol, benzene, thinner, ammonia-based cleaners, or other chemical detergents, to prevent any damage to the product or the environment.

NOTE: In some locations the use of cleaner products is regulated. Ensure that your cleaner follows federal, state, and local regulations.

Maintenance resources

Maintenance kits

Name	Purpose	How to order	Part number
Printer initial maintenance kit	For periodic maintenance operations that require the replacement of printer parts; lasts for about 1 year	Through the usual channel	UA4Z0E
Printer yearly maintenance kit	For periodic maintenance operations that require the replacement of printer parts; lasts for 100 full jobs	Through the usual channel	UA4Y6E
Processing-station cleaning and maintenance kit	For periodic maintenance operations that require the replacement of processing-station parts; lasts for 320 full buckets	Through the usual channel	1MZ25

Kit contents and recommended tools

NOTE: The contents of each kit may vary.

Printer initial maintenance kit contents

Part	Quantity	Purpose
Print-zone filters	2	Replace the print-zone filter on page 148
Top heating filters	2	Replace the heating-lamp filter on page 143
E-cabinet filter	1	Replace the e-cabinet filter on page 145
Power box filters	2	Replace the power-box fan filters on page 146

Part	Quantity	Purpose
Build-unit filters	2	Replace the build-unit material-chamber filters on page 221
Safety glasses and masks	2	General maintenance processes

Printer yearly maintenance kit contents

Part	Quantity	Purpose
Top-enclosure right filters	4	Replace the top-enclosure left and right fan filters on page 150
Top-enclosure left filters	2	Replace the top-enclosure left and right fan filters on page 150
Heating lamps	2	Replace a heating lamp on page 180
Fusing lamps	6	Replace the fusing lamps on page 169
Rubber blades	2	Replace the printhead cleaning roll's rubber blade on page 160

Processing-station cleaning and maintenance kit contents

Part	Quantity	Purpose
Vacuum pump filter	2	Replace the vacuum-pump filter on page 202
Dust extractor filter	2	Replace the dust extractor filters on page 200
E-cabinet fan filter	4	Replace an e-cabinet fan filter on page 194
Hand air blower	1	Clean the loading nozzle sensor on page 188

Other kits

The following kits can be used when a specific component is needed.

Kit	Part number	Quantity	Part
HP Jet Fusion 3D Printer Top Enclosure Right Filters kit	UA4Y7E	2	Top-enclosure right fan filter
HP Jet Fusion 3D Printer Top Enclosure Left Filters kit	UA4Y8E	1	Top-enclosure left fan filter
HP Jet Fusion 3D Printer Heating Lamps kit	UA4Y9E	2	Heating lamp
HP Jet Fusion 3D Printer Fusing Lamps kit	UA4Z2E	2	Fusing lamp
HP Jet Fusion 3D Printer Service for Printhead cleaning roll rubber blade	U9ZT3E	1	Fusing lamp
HP Jet Fusion 3D Printer Service for print-zone filter	U9ZT4E	1	Fusing lamp
HP Jet Fusion 3D Printer and Build unit Service for PowerBox filters	U9ZT5E	1 set of filters (3 filters)	Fusing lamp
HP Jet Fusion 3D Printer Service for Top heating lamps filter	U9ZT6E	1	Fusing lamp
HP Jet Fusion 3D Printer Service for Vacuum pump filter	U9ZT7E	1	Fusing lamp

Kit	Part number	Quantity	Part
HP Jet Fusion 3D Printer Service for Dust extractor filter	U9ZT8E	1 set of filters (2 filters)	Fusing lamp
HP Jet Fusion 3D Processing Station Service for E-Cabinet fan filter	U9ZT9E	1 set of filters (4 filters)	Fusing lamp
HP Jet Fusion 3D Printer Service for Hand air blower	U9ZU0E	1	Fusing lamp

Preventive maintenance

The purpose of scheduled preventive maintenance is to perform regular maintenance operations as required, in order to prevent possible failures from occurring and ensure good performance throughout the life of the product.

For each scheduled preventive maintenance action, there is an internal life counter in the firmware that counts a variable related to the life of the component.

When the internal life counter reaches the limit for a preventive maintenance action (set according to testing and development), an alert is displayed in the Notification center on the Front panel.

Preventive maintenance alerts and actions

There are two types of preventive maintenance alerts:

- Alerts that require a service engineer to complete the action (contact your support representative)

  There are three such alerts, corresponding to the three maintenance kits described below.

- Alerts that require the customer to complete the action

Service preventive maintenance alerts

When a preventive maintenance number is displayed, before dispatching the part, a check is required in case there are other preventive maintenance alerts almost due; in which case, they can be done together.

Alert	Description
Printer maintenance kit #1 required	Replace the printhead carriage and scan-axis assembly
Printer maintenance kit #2 required	Replace the recoating unit carriage and impelling system
Printer maintenance kit #3 required	Replace the scan axis motor and curtains
Build unit maintenance kit #1 required	Replace platform nut and column gasket

NOTE: The Notification Center displays alerts only for the build unit that is inserted at that time.

Operator preventive maintenance alerts

The Notification Center displays alerts whenever a maintenance action is required.

Alert	Action required
Replace fusing agents intermediate tanks	Replace an intermediate tank on page 183
Replace detailing agents intermediate tanks	Replace an intermediate tank on page 183
Replace rubber blade	Replace the printhead cleaning roll's rubber blade on page 160

Check for alerts through the front panel status center

Any alert concerning the printer and the build unit preventive maintenances is displayed at the top of the front panel in the status center, which can be expanded by swiping down from the top.

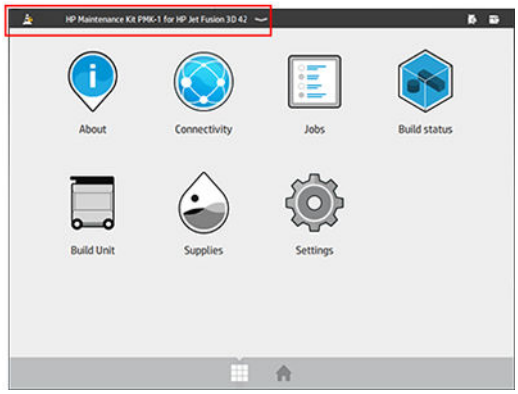

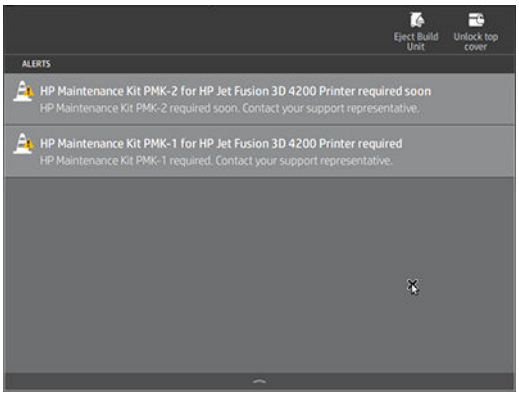

NOTE: The status center displays alerts only for the build unit that is inserted at that time.

Check preventive maintenance usage level on the front panel

You can check the preventive maintenance usage levels, which are automatically converted to a percentage according to the life counter values, in the **Maintenance** application.

To do so, select **Settings** > **Maintenance** > **Show PMK status** and follow the instructions.

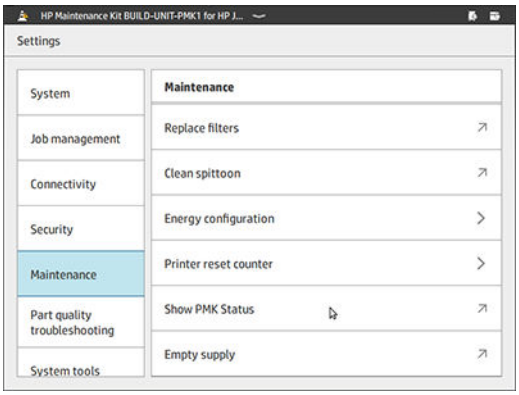

The front panel displays the current status of all user and service preventive maintenances. It also displays the maintenances required for the build unit currently inserted, if any.

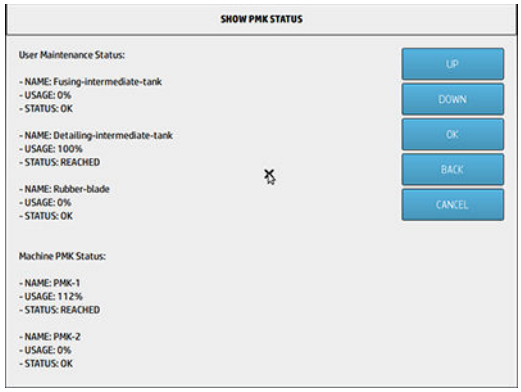

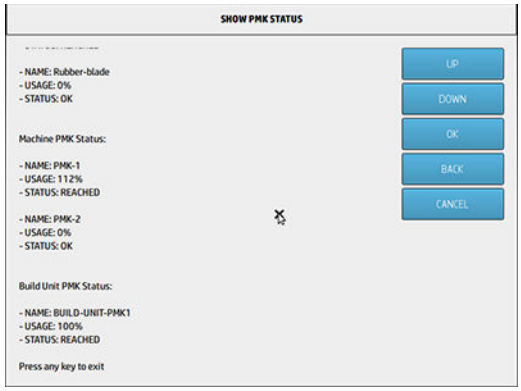

NOTE: Only the usage levels for the build unit that is inserted at that time are displayed.

NOTE: The percentages given are estimates only.

Maintenance tools recommended but not provided

- Spiral scourer, for some cleaning operations

  Use a scourer that does not scratch glass; test it on a corner if in doubt.

- Absorbent all-purpose cloth, for cleaning covers and general cleaning

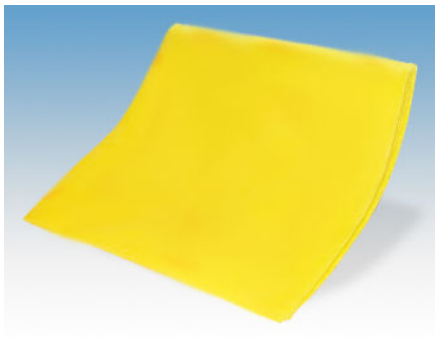

- Lint-free cloth or all-cotton cloth, for cleaning covers and general cleaning

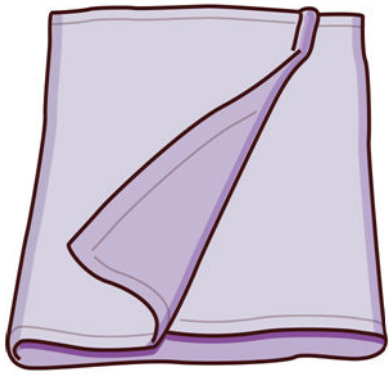

- Isopropyl alcohol, for general cleaning

NOTE: If you are in an area (such as California) that regulates VOC cleaning and maintenance fluids, instead of isopropyl alcohol use a VOC-certified cleaner such as a properly diluted Simple Green All-Purpose Cleaner.

- Deionized water, for general cleaning

- Explosion-protected vacuum cleaner, with nozzle accessories for general cleaning (crevice and soft brush nozzles highly recommended)

NOTE: Inside and outside the equipment should be cleaned regularly with an explosion-protected vacuum cleaner to prevent dust from accumulating. Do not sweep the dust or try to remove it with a compressed-air gun.

An explosion-protected vacuum cleaner certified for collection of combustible dust is required for cleaning. Take measures to mitigate material spillage and avoid potential ignition sources such as ESD (ElectroStatic Discharges), flames, and sparks. Do not smoke nearby.

- Flashlight, for general use

- Folding steps, for general use

- Flat and torx screwdrivers

Printer maintenance

Summary of maintenance operations

Frequency	Maintenance operation	Part description and number
After every job	Clean the print zone, carriage, and housing structure on page 106	
	Clean the bottom of the carriage and of the fusing lamps on page 108	
	Clean the temperature camera glass on page 110	
Every 5 jobs	Clean the front bar on page 105	

Frequency	Maintenance operation	Part description and number
	Clean the exterior of the printer on page 114	
	Clean the scan-axis wipers on page 114	
	Clean the inside of the carriage on page 115	
	Clean the recoating roller and recoating plates on page 117	
	Clean the service-station caps on page 122	
	Clean the spittoon on page 112	
	Clean the top-enclosure fan filters on page 123	
Every 100 jobs	Clean the quartz glass of the heating lamps on page 125	
	Clean the fusing-lamp glasses on page 127	
	Clean the recoater's left box and left rod on page 133	
Once a year	Check the functionality of the Residual Current Circuit Breakers (RCCBs) on page 136	
	Check that the printer is correctly earthed on page 136	
At printhead reject or reseat	Clean the printhead contacts in the carriage on page 138	
	Clean the printhead contacts on the printhead on page 139	
When required	Clean the print-zone window on page 140	
	Clean the recoating unit cover glass on page 141	
	Replace the print-zone filter on page 148	Printer yearly maintenance kit (1MZ24)
	Replace the heating-lamp filter on page 143	Printer yearly maintenance kit (1MZ24)
	Replace the e-cabinet filter on page 145 and Replace the power-box fan filters on page 146	Printer yearly maintenance kit (1MZ24)
	Replace the top-enclosure left and right fan filters on page 150	Printer initial maintenance kit (1MZ23), provided with your printer When required, use the printer top enclosure right filter kit (1MZ21) and printer top enclosure left filter kit (1MZ22)
	Replace a primer on page 151	Go through the usual channel to purchase spares
	Replace a service-station cap module on page 154	Go through the usual channel to purchase spares
	Rubber-blade height adjustment on page 155	
	Replace the printhead cleaning roll's rubber blade on page 160	Printer initial maintenance kit (1MZ23), provided with your printer

Frequency	Maintenance operation	Part description and number
	Replace a service-station drop-detector module on page 162	Go through the usual channel to purchase spares
	Replace the recoating roller and recoating plates on page 166	Go through the usual channel to purchase spares
	Replace the quartz glass of the heating lamps on page 169	Go through the usual channel to purchase spares
	Replace the fusing lamps on page 169	Printer initial maintenance kit (1MZ23), provided with your printer When required, use the printer fusing lamps kit (1MZ27)
	Calibrate the fusing lamps on page 175	
	Replace a fusing-lamp external glass on page 175	Go through the usual channel to purchase spares
	Replace a fusing-lamp internal glass on page 177	Go through the usual channel to purchase spares
	Replace a heating lamp on page 180	Printer initial maintenance kit (1MZ23), provided with your printer When required, use the printer heating lamps kit (1MZ26)
	Replace an intermediate tank on page 183	Go through the usual channel to purchase spares
	Replace the cleaning-roll collector on page 184	Go through the usual channel to purchase spares
	Replace the cleaning-roll free hub on page 186	Go through the usual channel to purchase spares
Replace the cleaning-roll rubber hub on page 186	Go through the usual channel to purchase spares	

Quick graphical reminders of frequent operations

Daily maintenance operations (20 min)

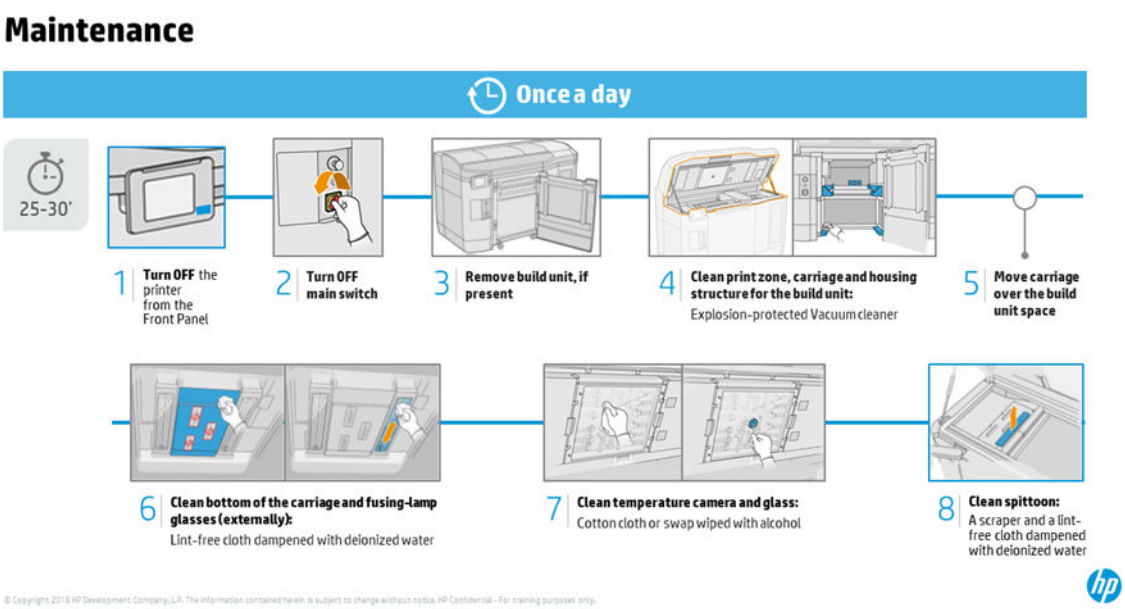

Weekly maintenance operations (60 min)

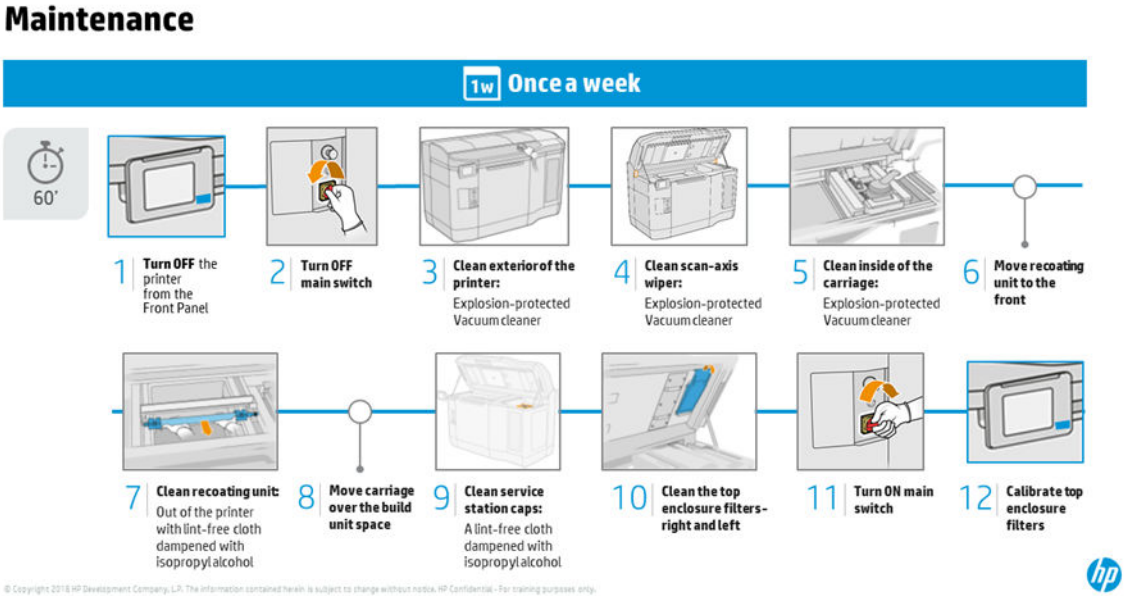

Maintenance operations

Clean the front bar

Prepare for cleaning

1. Ensure that you have an absorbent all-purpose cloth (not provided by HP).
2. Ensure that the printer is not printing.
3. Turn off the printer.
4. If a job has just been printed, wait about 20 minutes for the printer to cool down.
5. You are recommended to wear gloves.

Clean the front bar

1. Open the top cover.

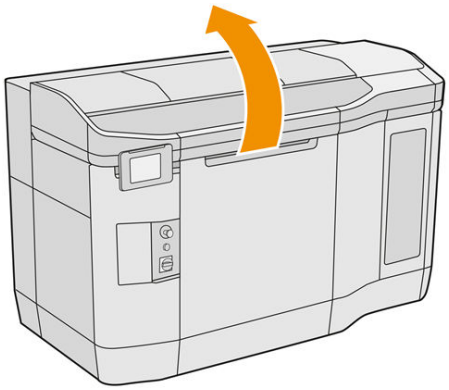

2. Clean the front bar using a lint-free cloth dampened with deionized water.

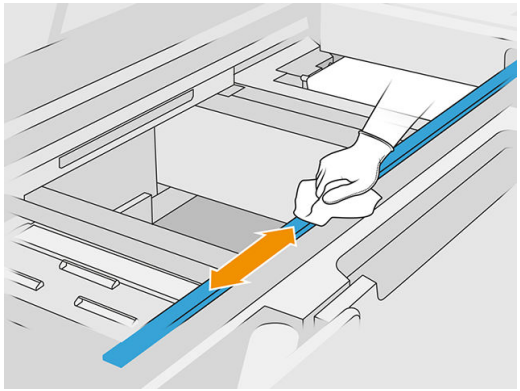

3. Move the carriage manually and slowly in order to clean the part of the bar underneath the carriage.

Finish cleaning

1. Close the top cover.
2. Ensure that all windows, covers, and doors are closed and remain in their original positions.

Clean the print zone, carriage, and housing structure

Prepare for cleaning

1. Ensure that you have an explosion-protected vacuum cleaner, an absorbent all-purpose cloth, and deionized water (these things are not provided by HP).

NOTE: If you are in an area (such as California) that regulates VOC cleaning and maintenance fluids, instead of isopropyl alcohol use a VOC-certified cleaner such as a properly diluted Simple Green All-Purpose Cleaner.

2. If the build unit is in the printer, remove it.
3. Ensure that the printer is not printing.
4. If a job has just been printed, wait about 20 minutes for the printer to cool down.
5. You are recommended to wear gloves and goggles.
6. Open the top cover.

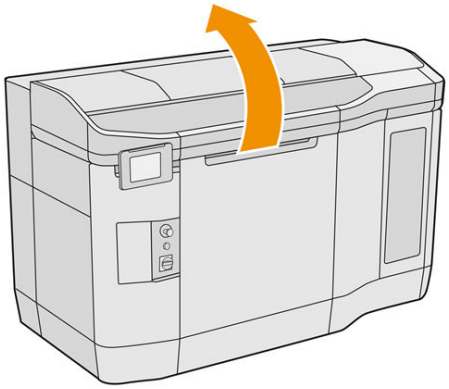

Clean the printer

1. Vacuum all the top cover surfaces including the heating-lamp quartz-glass zone and the left and right filters.

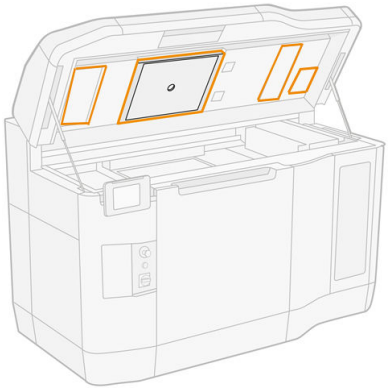

NOTE: If the internal metallic part is dirty, clean it with a lint-free cloth dampened with water.

2. Clean the dust from the print zone using an explosion-protected vacuum cleaner with a soft brush nozzle.

CAUTION: When vacuuming the scan axis or recoater curtains, do not push too hard against the curtains: they could bend inside and slip out of their guides.

NOTE: Clean the recoater curtains with a lint-free cloth. Make sure there is no material left on the curtains.

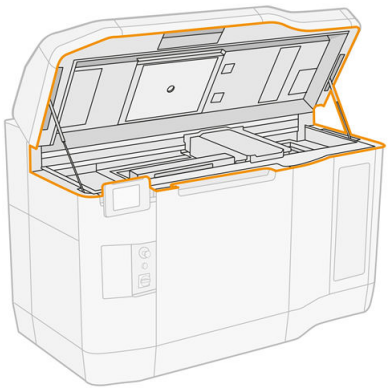

3. Vacuum the whole print carriage and capping zone. Move the print carriage manually if necessary, slowly and carefully. Additionally, you can use a lint-free cloth dampened with deionized water to clean the surfaces. Make sure that the carriage is dry before printing.

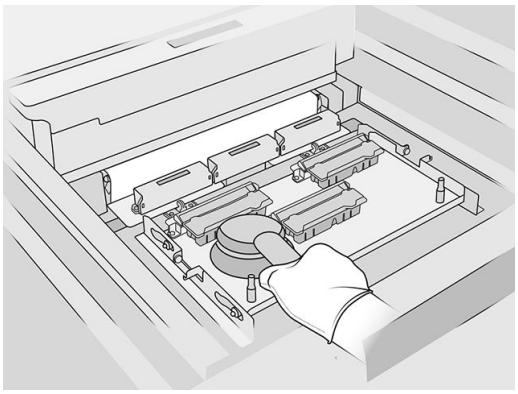

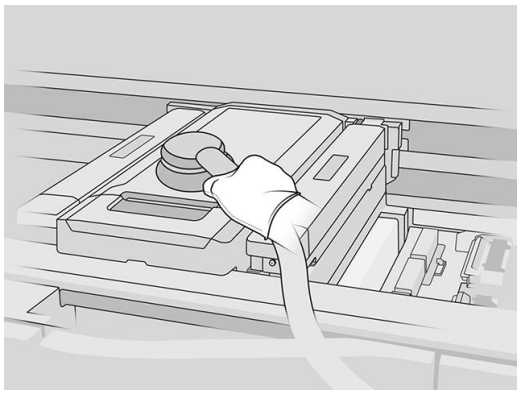

4. Vacuum the whole recoating unit. Additionally, you can use a lint-free cloth dampened with deionized water to clean the surfaces. Make sure that the carriage is dry before printing.

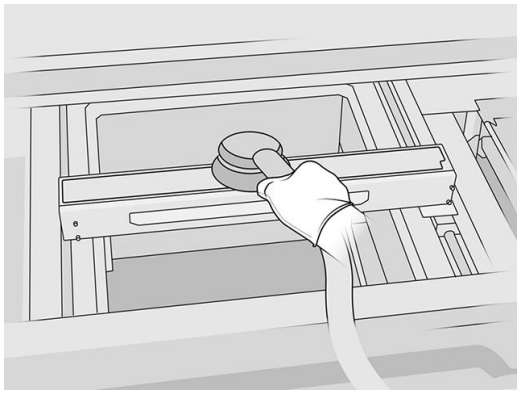

5. If your printer has a recoating unit with glass in the lid, clean the glass with a cloth dampened with deionized water. Make sure that the recoater is dry before printing.

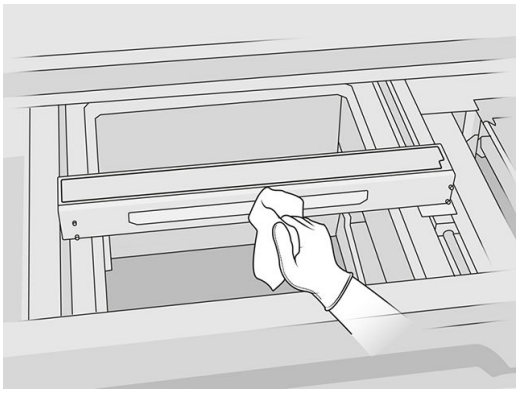

6. Vacuum the housing structure for the build unit and its internal parts including the build unit connector to ensure that there is no material around or inside the connector. Do the same with the build unit connector side as well.

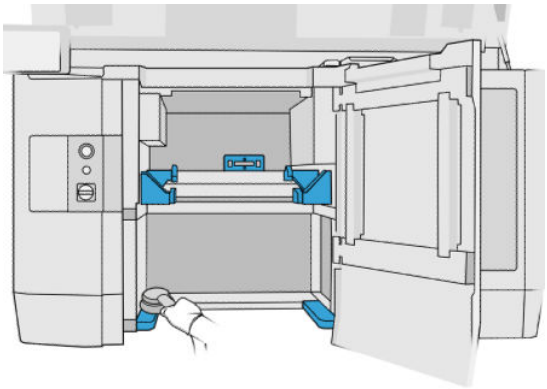

Make sure there is no material left on the build unit seal. Clean it with an explosion-protected vacuum cleaner, then wipe it with a cloth dampened with deionized water. If any material is still left, remove it with a scraper.

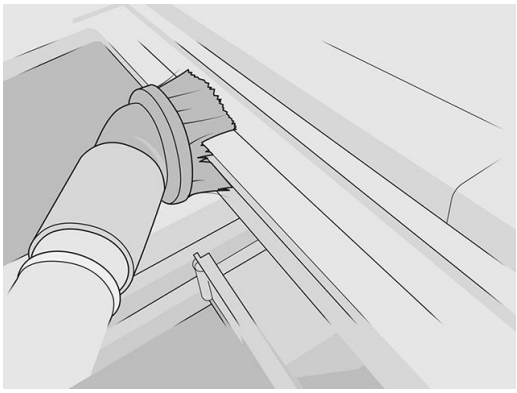

Clean the bottom of the carriage and of the fusing lamps

Prepare for cleaning

1. Ensure that you have a lint-free cloth and deionized water (these things are not provided by HP).
2. Ensure that the printer is not printing.
3. If a job has just been printed, wait about 20 minutes for the printer to cool down.
4. You are recommended to wear gloves and goggles.

5. Open the build-unit door and remove the build unit from the printer, if it is present.

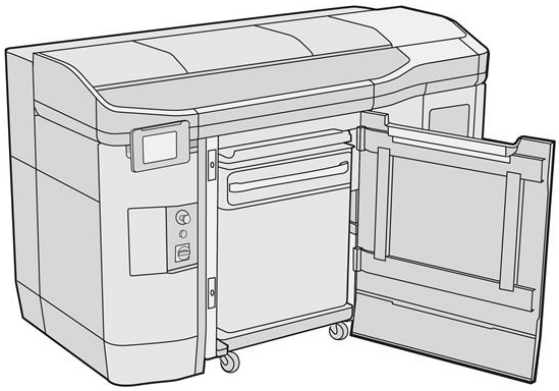

6. Open the top cover.
7. Move the print carriage manually over the build unit space, slowly and carefully.

Risk of burns

Crush hazard

Risk of trapped fingers

Hazardous moving part

Light radiation hazard

Electric shock hazard

For more safety information, see Safety precautions on page 6

Clean the bottom of the carriage

1. Clean the carriage bottom with a lint-free cloth dampened with deionized water.

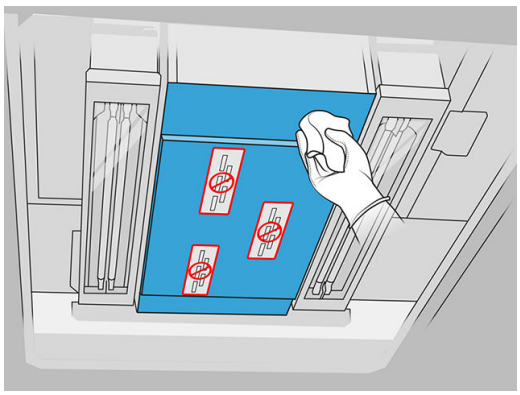

⚠ CAUTION: Be very careful not to touch the printheads.

2. Vacuum the bottoms of both fusing-lamp glasses, and then clean the bottoms of both fusing-lamp glasses with the same cloth.

Continue cleaning until each glass is completely clean.

If there is some plastic or material stuck to the glass, try to remove it: see Clean the fusing-lamp glasses on page 127. Failing that, dispose of the glass and install a new glass: see Replace a fusing-lamp external glass on page 175.

Finish cleaning

1. Put the print carriage cover back into place.
2. Close the top cover.
3. Close the build-unit door.
4. Ensure that all windows, covers, and doors are closed and remain in their original positions.

Clean the temperature camera glass

Prepare for cleaning

1. Ensure that you have an explosion-protected vacuum cleaner, an absorbent all-purpose cloth, and deionized water (these things are not provided by HP).

NOTE: If you are in an area (such as California) that regulates VOC cleaning and maintenance fluids, instead of isopropyl alcohol use a VOC-certified cleaner such as a properly diluted Simple Green All-Purpose Cleaner.

2. If the build unit is in the printer, remove it.
3. Ensure that the printer is not printing.
4. Turn off the printer.
5. If a job has just been printed, wait about 20 minutes for the printer to cool down.
6. You are recommended to wear gloves and goggles.

7. Open the top cover.

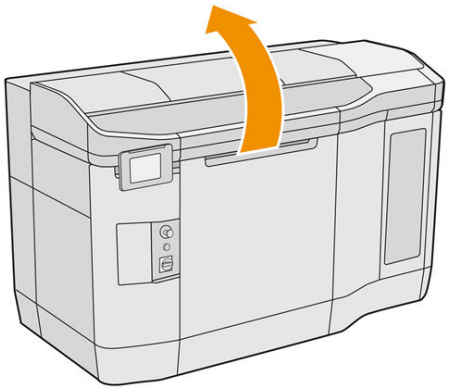

Clean the temperature camera glass

1. Vacuum the sensor glass with a soft brush nozzle.

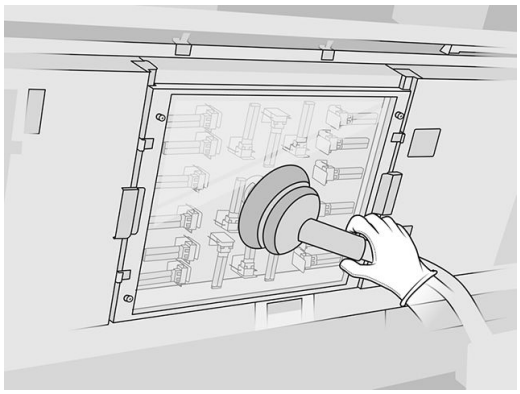

2. Clean the external surface of the sensor glass:

   a. Wipe the glass surface with a lint-free cloth dampened with isopropyl alcohol.

   NOTE: If you are in an area (such as California) that regulates VOC cleaning and maintenance fluids, instead of isopropyl alcohol use a VOC-certified cleaner such as a properly diluted Simple Green All-Purpose Cleaner.

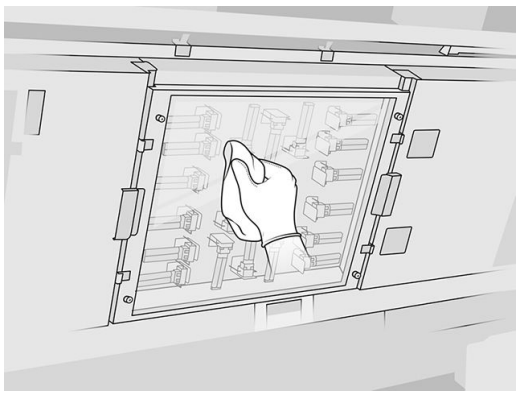

   b. If necessary, clean the glass with a scourer.

   c. Continue cleaning the glass with the cloth and scourer until it is completely clean.

   d. Wait until the glass is dry to start printing.

3. Wipe the sensor glass clean by rubbing the surfaces lightly with a clean, soft, all-cotton cloth or cotton swab moistened with isopropyl alcohol. Then immediately wipe it dry with another clean, soft, all-cotton cloth or cotton swab.

NOTE: If you are in an area (such as California) that regulates VOC cleaning and maintenance fluids, instead of isopropyl alcohol use a VOC-certified cleaner such as a properly diluted Simple Green All-Purpose Cleaner.

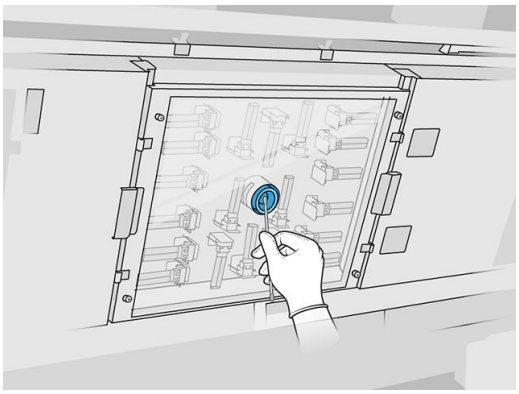

Clean the spittoon

Prepare for cleaning

1. Ensure that you have a plastic scraper, lint-free cloth, deionized water, and isopropyl alcohol (these things are not provided by HP).

NOTE: If you are in an area (such as California) that regulates VOC cleaning and maintenance fluids, instead of isopropyl alcohol use a VOC-certified cleaner such as a properly diluted Simple Green All-Purpose Cleaner.

2. Ensure that the printer is not printing.
3. If a job has just been printed, wait about 20 minutes for the printer to cool down.
4. You are recommended to wear gloves.

Locate the spittoon

1. Open the top cover.

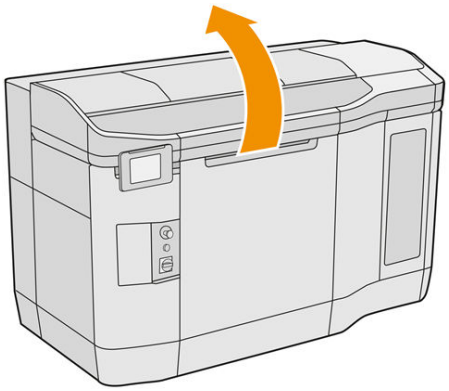

2. Locate the spittoon and check whether it is dirty.

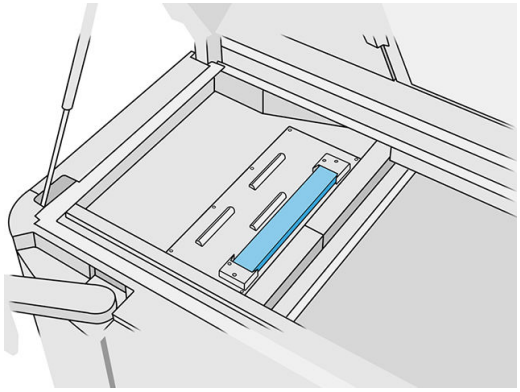

Clean the spittoon

1. Unclip the front of the spittoon and remove the spittoon from the printer.

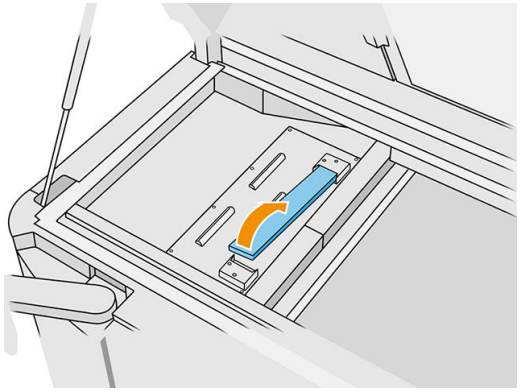

2. Scrape the spittoon with a plastic scraper.

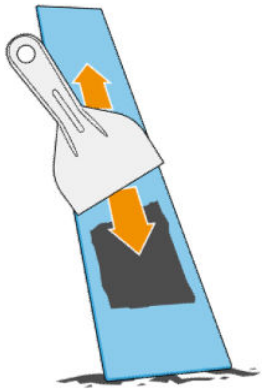

3. Clean the spittoon with a lint-free cloth dampened with deionized water.

NOTE: About once a month, turn off the printer, and clean the spittoon area with a cloth dampened with isopropyl alcohol.

NOTE: If you are in an area (such as California) that regulates VOC cleaning and maintenance fluids, instead of isopropyl alcohol use a VOC-certified cleaner such as a properly diluted Simple Green All-Purpose Cleaner.

4. Put back the cleaned spittoon, inserting the rear end first, and pushing down the block until it clicks into place.

Finish checking/cleaning

1. Close the top cover.
2. At the front panel, tap , then **Maintenance** > **Clean spittoon**.

Clean the exterior of the printer

1. Check the whole printer for dust, material, or aerosol on covers, print-zone windows, doors, and so on.
2. If necessary, clean the printer further using an explosion-protected vacuum cleaner with a soft brush nozzle.

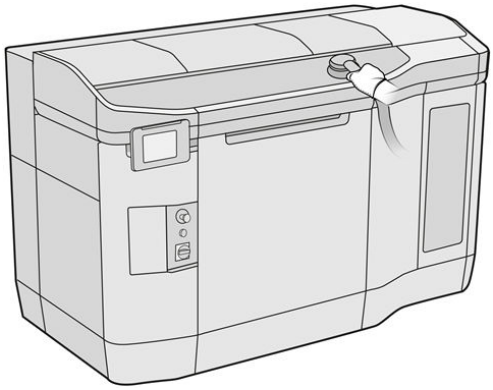

Additionally, you can wipe it with a dry cloth.

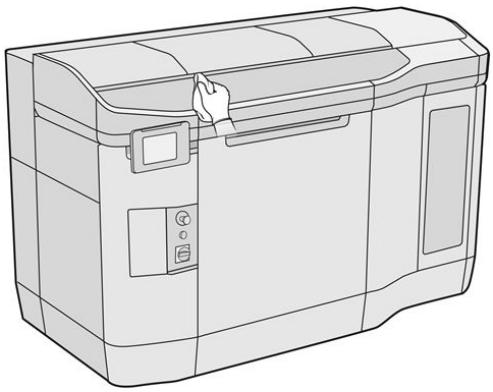

Clean the scan-axis wipers

Prepare for cleaning

1. Ensure that you have an explosion-protected vacuum cleaner and a screwdriver.
2. Ensure that the printer is not printing.
3. If a job has just been printed, wait about 20 minutes for the printer to cool down.
4. Turn off the printer.
5. You are recommended to wear gloves.

Clean the scan-axis wipers

1. Open the top cover to access the scan-axis wipers.

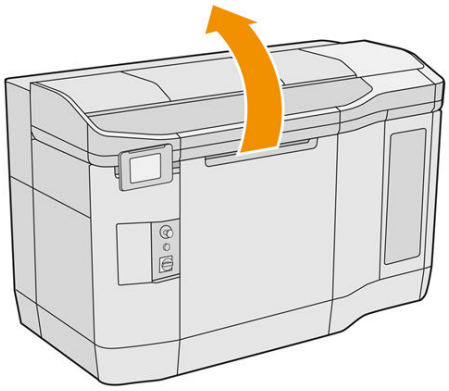

2. Locate the scan-axis wipers, one on each side.

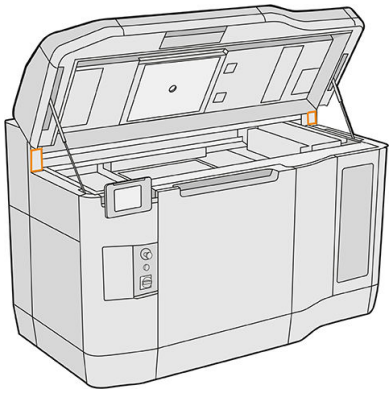

3. Remove two screws from each wiper, and remove the wipers.
4. Vacuum the area.
5. Vacuum the wipers. You can also clean them with a dry cloth.

Finish cleaning

1. Put the wipers back in place, and fasten them with the screws.
2. Close the top cover.
3. Ensure that all windows, covers, and doors are closed and remain in their original positions.
4. Turn on the printer.

Clean the inside of the carriage

Prepare for cleaning

1. Ensure that you have an explosion-protected vacuum cleaner (not provided by HP).
2. Ensure that the printer is not printing.
3. If a job has just been printed, wait about 20 minutes for the printer to cool down.
4. You are recommended to wear gloves and goggles.

5. Open the top cover.

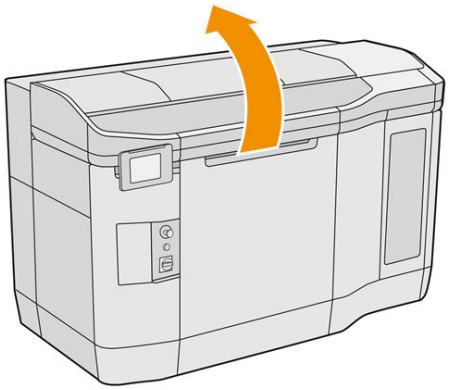

Clean the inside of the carriage

1. Pull the print carriage handle to open the cover.

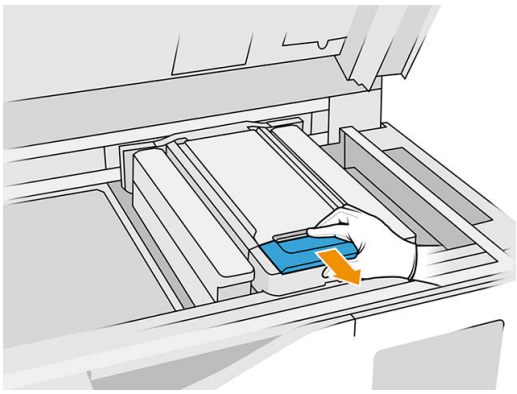

2. Lift the print carriage cover.

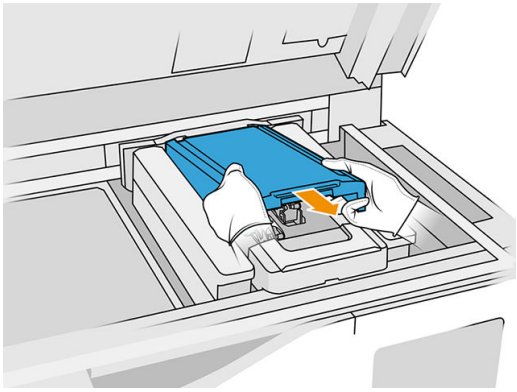

3. Vacuum inside the carriage, using an explosion-protected vacuum cleaner with a soft brush nozzle.

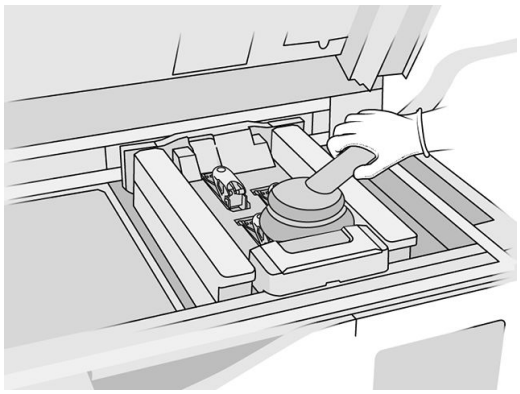

Finish cleaning

1. Put the print carriage cover back into place.
2. Close the top cover.

Clean the recoating roller and recoating plates

Prepare for cleaning

1. Ensure that the printer is not printing.
2. If a job has just been printed, wait about 20 minutes for the printer to cool down.
3. You are recommended to wear gloves.
4. Ensure that all windows, covers, and doors are closed and remain in their original positions.
5. Open the top cover.

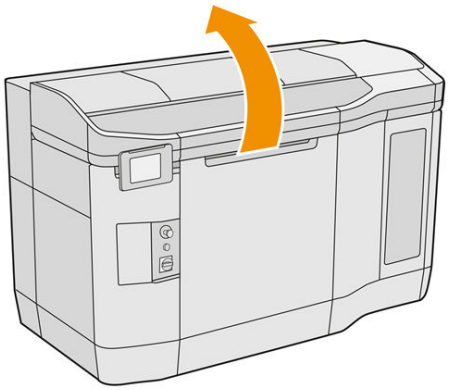

6. Remove the build unit from the printer, if it is present.
7. Move the recoating unit manually to the front, slowly and carefully.

Clean the recoating roller and recoating plates

1. Locate the recoating unit and use a flat screwdriver to remove four T15 screws.

⚠ CAUTION: Be careful not to drop the screws.

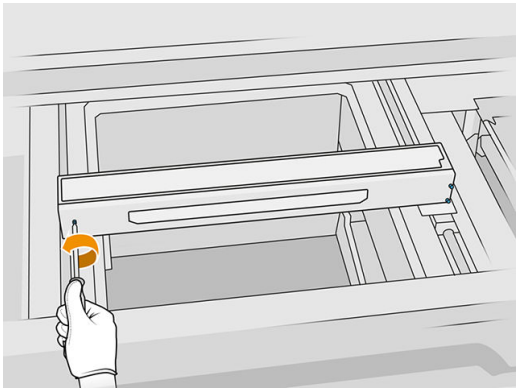

2. Remove the front lid. If necessary, clean the recoating unit cover glass gently with a dry cloth (see Clean the recoating unit cover glass on page 141).

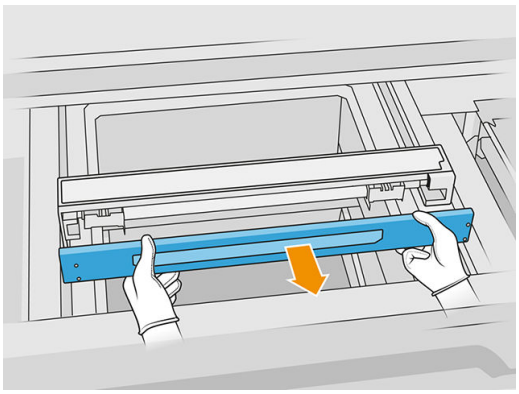

3. Slide the top sheet to one side until you can see the holes; do not remove it completely.

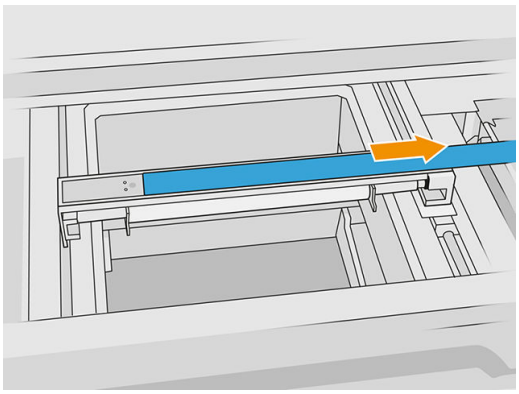

4. Remove two T10 screws.

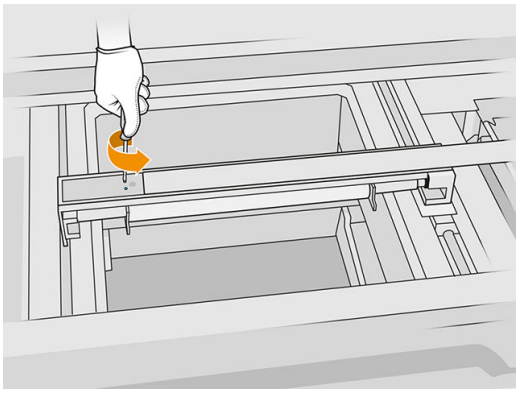

5. Repeat steps 3 and 4 on the other side.

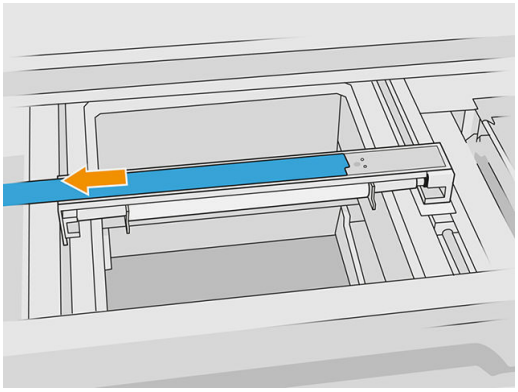

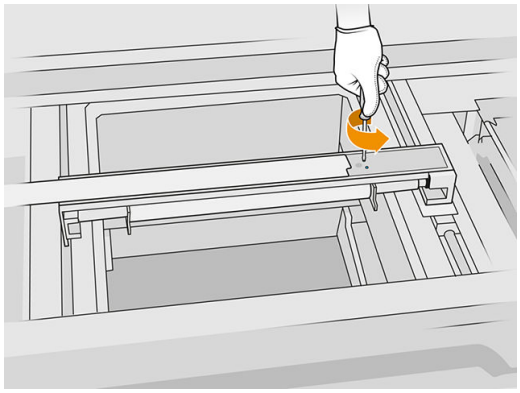

6. Remove the roller by pulling it towards you, and place it gently on a table or flat surface.

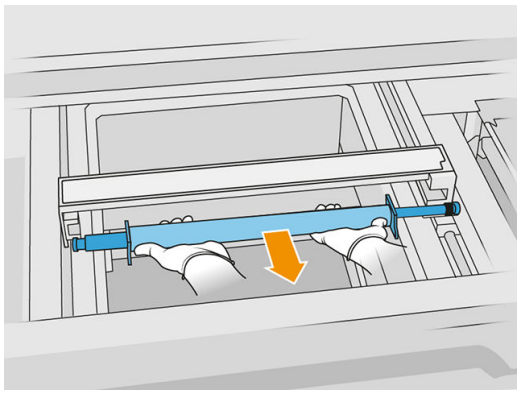

7. Use a cloth dampened with isopropyl alcohol to clean all along the recoating roller.

NOTE: If you are in an area (such as California) that regulates VOC cleaning and maintenance fluids, instead of isopropyl alcohol use a VOC-certified cleaner such as a properly diluted Simple Green All-Purpose Cleaner.

8. Remove the recoating plates for easy cleaning, and clean them thoroughly, especially on the inner side.

NOTE: In some printers, the recoating plates are open at the bottom, in which case cleaning is not needed.

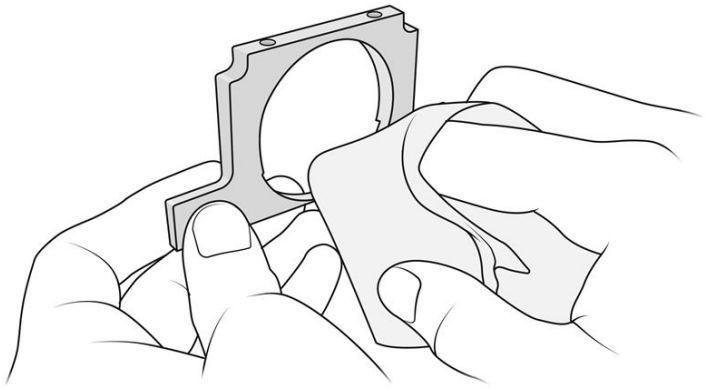

IMPORTANT: No material should be left on the plate.

NOTE: Depending on the printer, the shape of the part may vary.

9. Clean the dust from the inside of the recoating unit, using an explosion-protected vacuum cleaner with a crevice nozzle. Place special attention to the right-hand side, where the gears are located.

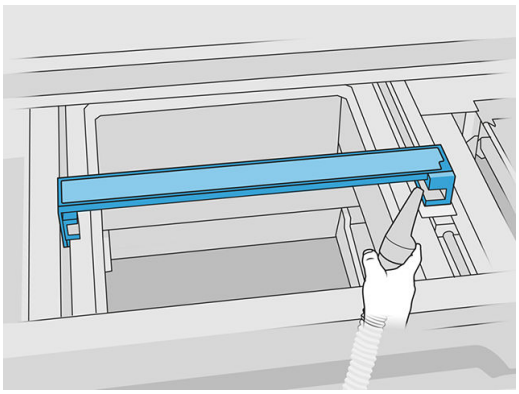

Finish cleaning

1. Put back both recoating plates.
2. Carefully reinsert the recoating roller by placing it and pushing it to the end.

NOTE: The gears should be on the right when placing the roller.

3. Align the plates with the line as shown below.

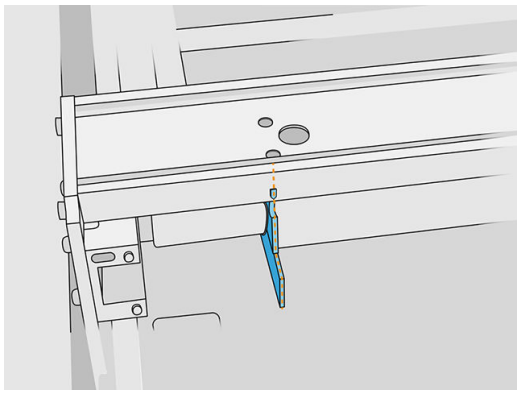

4. Secure the recoating roller with the top four screws.

TIP: Hold the plate up while tightening the top screws.

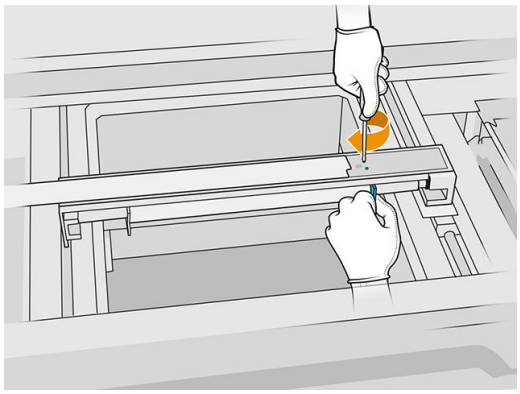

5. Put back the front lid of the recoating unit, but do not insert the screws yet.
6. Attach the lid with the four T15 screws.

IMPORTANT: While tightening the screws on the right, smoothly rotate the roller in both directions to check that the gear teeth are properly engaged.

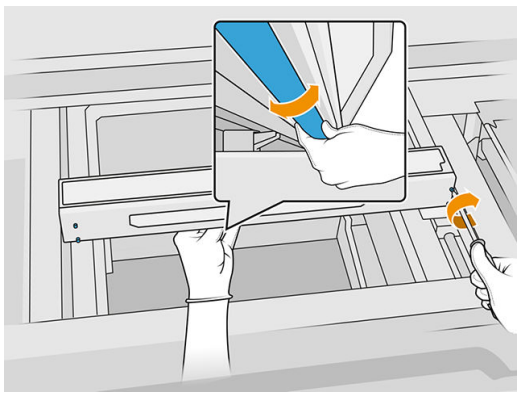

7. Close the top cover.
8. Ensure that all windows, covers, and doors are closed and remain in their original positions.

Clean the service-station caps

Prepare for cleaning

1. Ensure that you have a lint-free cloth and isopropyl alcohol (these things are not provided by HP).

NOTE: If you are in an area (such as California) that regulates VOC cleaning and maintenance fluids, instead of isopropyl alcohol use a VOC-certified cleaner such as a properly diluted Simple Green All-Purpose Cleaner.

2. Ensure that the printer is not printing.
3. Turn off the printer.
4. If a job has just been printed, wait about 20 minutes for the printer to cool down.
5. You are recommended to wear gloves.
6. Open the top cover.

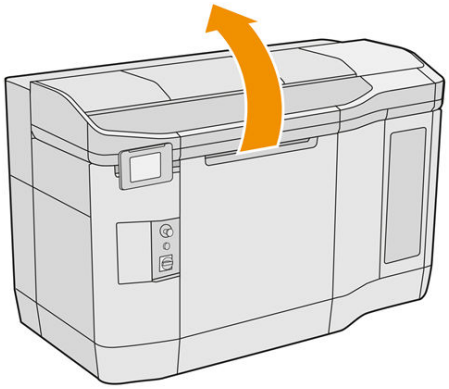

7. Move the print carriage manually to the left, slowly and carefully, to access the capping station.

Risk of burns

Crush hazard

Risk of trapped fingers

Hazardous moving part

Light radiation hazard

Electric shock hazard

For more safety information, see Safety precautions on page 6

Clean the service-station caps

1. Locate the three service-station caps to be cleaned.

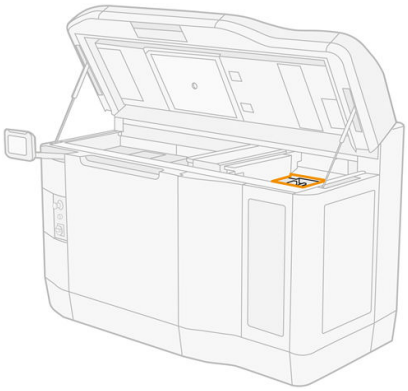

2. Clean the service-station caps using a lint-free cloth dampened with isopropyl alcohol.

NOTE: If you are in an area (such as California) that regulates VOC cleaning and maintenance fluids, instead of isopropyl alcohol use a VOC-certified cleaner such as a properly diluted Simple Green All-Purpose Cleaner.

CAUTION: Take special care not to disengage the spring.

Finish cleaning

1. Close the top cover.
2. Ensure that all windows, covers, and doors are closed and remain in their original positions.
3. Turn on the printer.

Clean the top-enclosure fan filters

Prepare to clean

1. Ensure that the printer is not printing.
2. If a job has just been printed, wait about 20 minutes for the printer to cool down.
3. You are recommended to wear gloves, goggles, and mask.

Clean the top-enclosure left and right fan filters

1. Open the top cover.

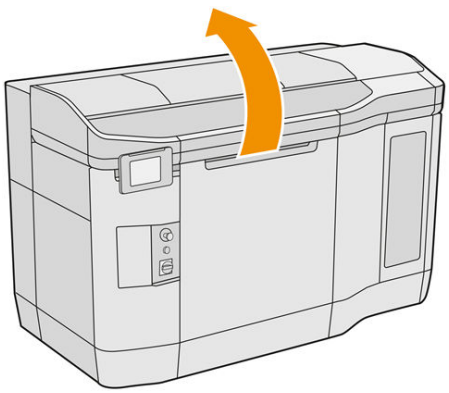

2. Locate the fan filters on the printer top cover at right and left.

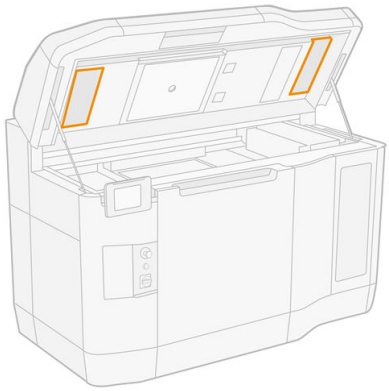

3. Unscrew the captive screws.

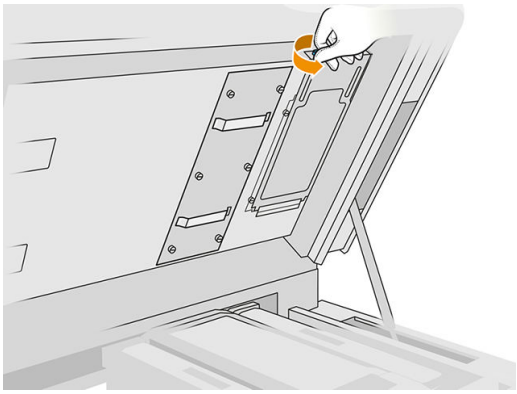

4. Remove the filter cover.

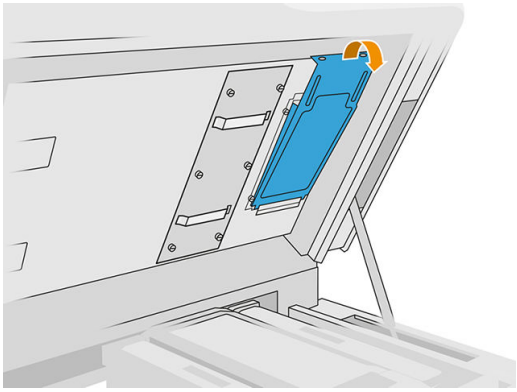

5. Remove each filter assembly, and take it somewhere with a non-explosive atmosphere.

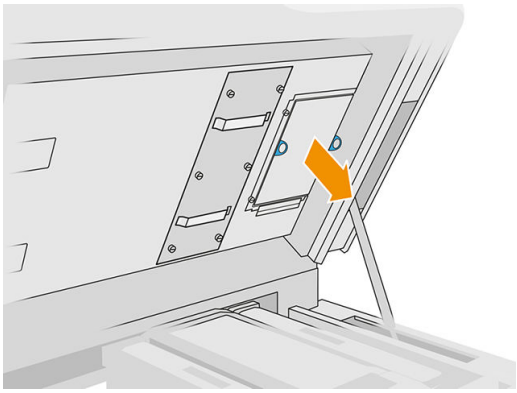

6. Position the filter flat over a hard surface with the airflow direction arrow pointing upwards. Then knock the filter gently against the hard surface until no material drops out of it.
7. Put each filter assembly back into the top enclosure (with the arrow pointing upwards) and tighten the screws.

Calibrate the cooling system

▲ At the front panel, tap , then **Maintenance** > **Cooling system calibration**.

Clean the quartz glass of the heating lamps

Prepare for cleaning

1. Ensure that you have a lint-free cloth, isopropyl alcohol, and a scourer (these things are not provided by HP).

NOTE: If you are in an area (such as California) that regulates VOC cleaning and maintenance fluids, instead of isopropyl alcohol use a VOC-certified cleaner such as a properly diluted Simple Green All-Purpose Cleaner.

2. Ensure that the printer is not printing.
3. If a job has just been printed, wait about 20 minutes for the printer to cool down.
4. You are recommended to wear gloves and safety goggles.
5. Ensure that all windows, covers, and doors are closed and remain in their original positions.

Remove the quartz glass of the heating lamps

1. Open the top cover.

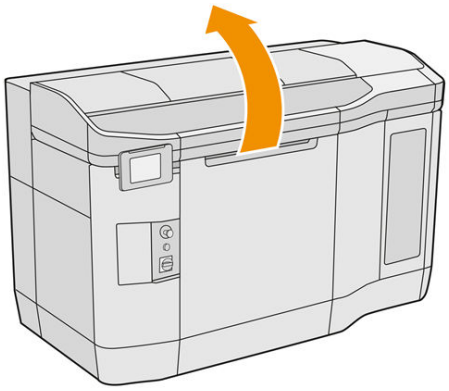

2. Locate the quartz glass of the heating lamps.

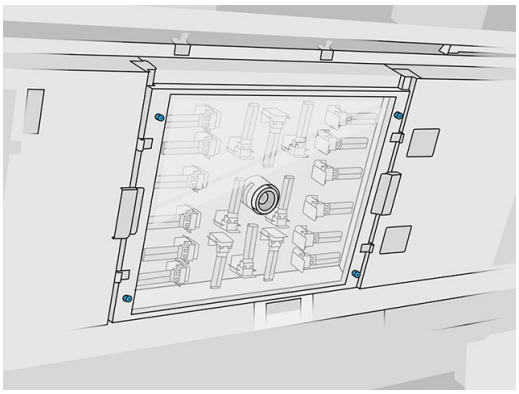

3. Unscrew the four captive screws to remove the quartz glass.

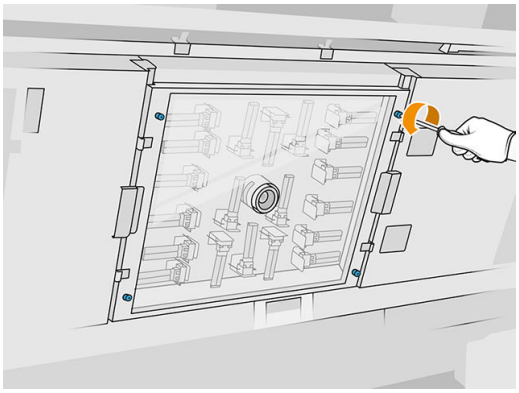

4. Pull the quartz glass out of the top cover and place it gently on a table.

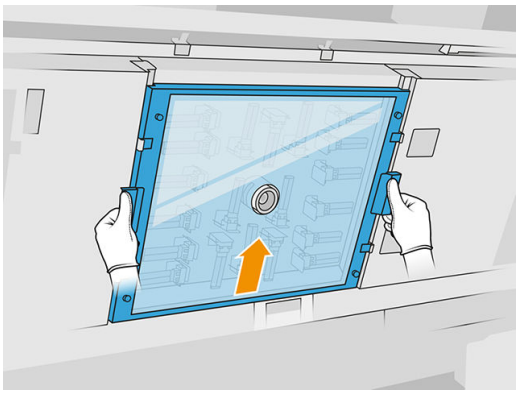

Clean the quartz glass of the heating lamps

1. Moisten both sides of the glass with a lint-free cloth dampened with isopropyl alcohol.

NOTE: If you are in an area (such as California) that regulates VOC cleaning and maintenance fluids, instead of isopropyl alcohol use a VOC-certified cleaner such as a properly diluted Simple Green All-Purpose Cleaner.

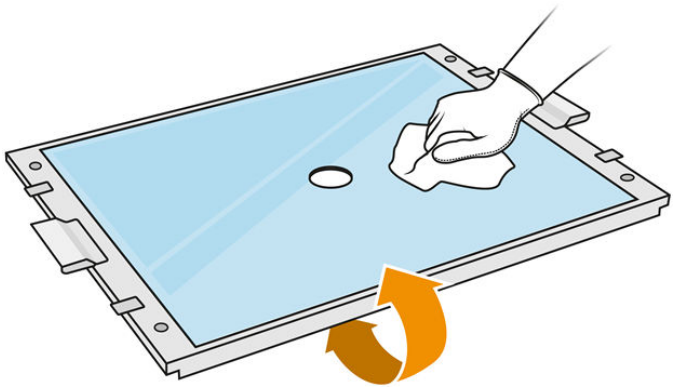

2. Scrub both sides of the glass with the scourer.
3. Continue cleaning with cloth and scourer until the glass is clean.

Reinstall the quartz glass of the heating lamps

1. Put back the quartz glass in the correct position.
2. Tighten the four captive screws.
3. Ensure that the cleaned parts are completely dry and all vapor has completely evaporated before proceeding.

Finish cleaning

1. Close the top cover.
2. Ensure that all windows, covers, and doors are closed and remain in their original positions.
3. Turn on the printer.

Clean the fusing-lamp glasses

Prepare for cleaning

1. Ensure that you have a lint-free cloth, isopropyl alcohol, and a scourer (these things are not provided by HP).
2. Optionally, you can make this task easier by downloading and printing the glass removal tools. You can download the tool from http://www.hp.com/go/jetfusion3d4200/software.
3. Ensure that the printer is not printing.
4. If a job has just been printed, wait about 20 minutes for the printer to cool down.
5. You are recommended to wear gloves.
6. Ensure that all windows, covers, and doors are closed and remain in their original positions.
7. Turn off the printer.

8. Open the top cover.

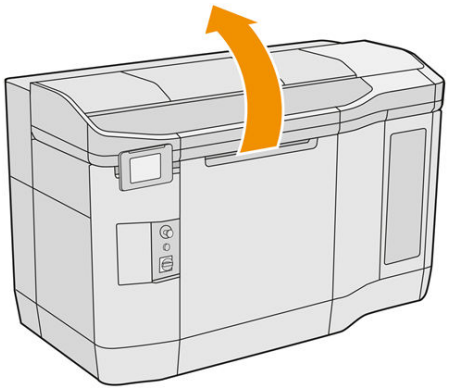

9. Move the print carriage manually over the build unit space, slowly and carefully.

Risk of burns

Crush hazard

Risk of trapped fingers

Hazardous moving part

Light radiation hazard

Electric shock hazard

For more safety information, see Safety precautions on page 6

Remove the fusing-lamp module

1. Identify which of the two lamps requires cleaning.

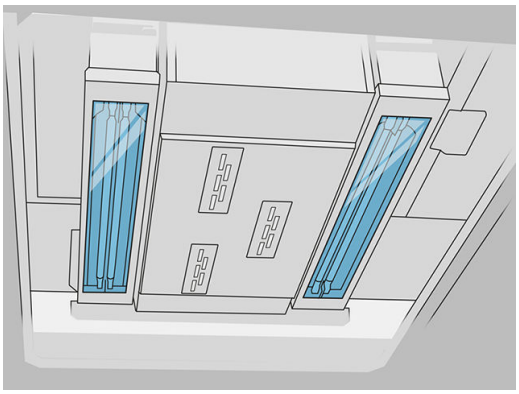

2. Unscrew the captive screw in the protective cover at the front of the fusing-lamp assembly.

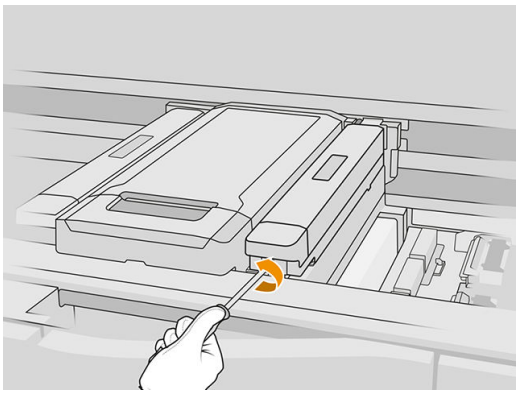

3. Pull up the protective cover carefully; there is a cable attached to it.

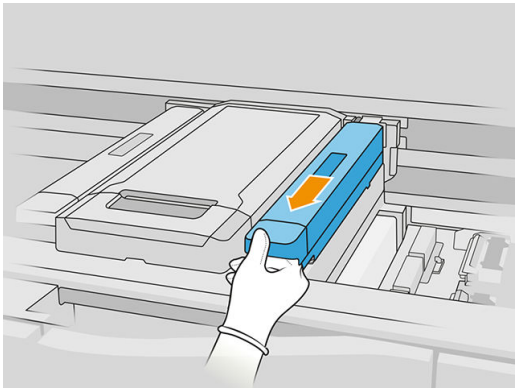

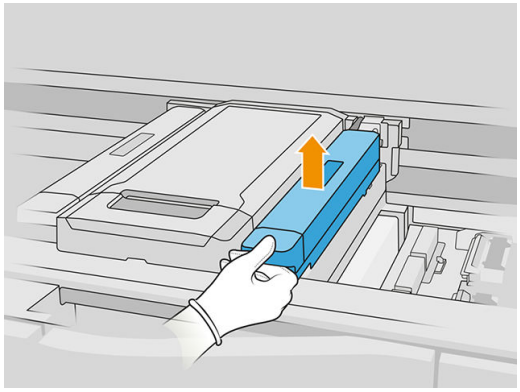

4. Unplug the temperature target sensor cable.

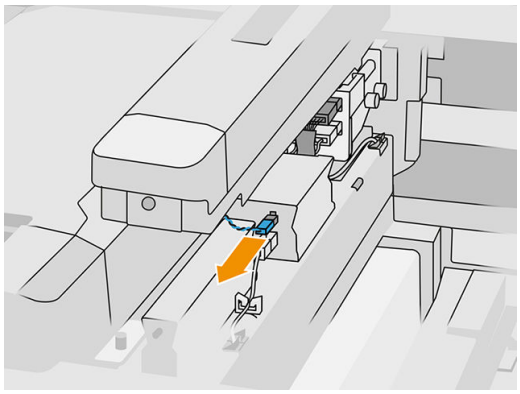

5. Unplug the sensor and the lamp's main connector.

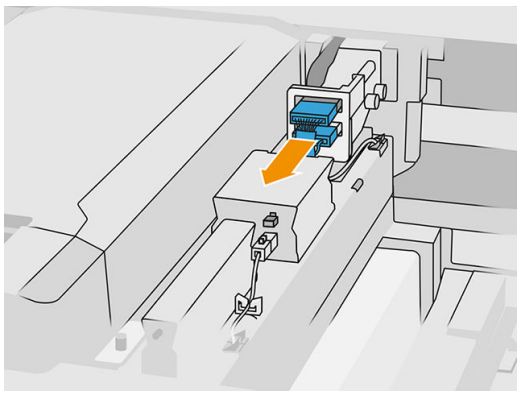

6. Unscrew another captive screw.

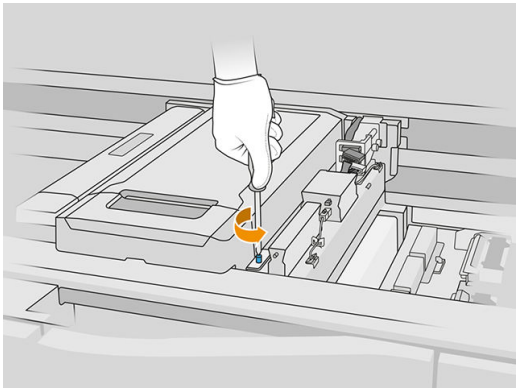

7. Pull the fusing-lamp assembly sideways and outwards.

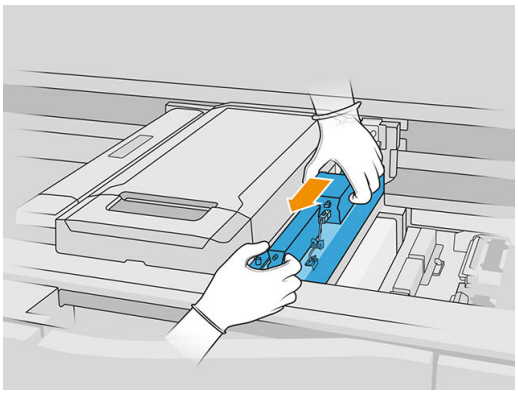

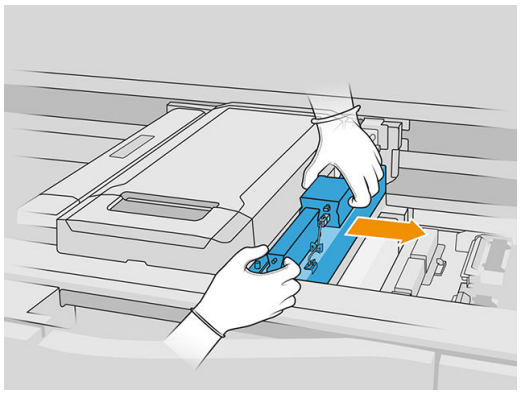

8. Take the fusing-lamp module out of the carriage and place it gently on a table.

Safety precautions for the fusing-lamp emitter

- Disregard of the safety precautions or improper operation of the infrared emitter can lead to injuries and material damage.
- The IR heating device should be operated only by specialists or trained personnel.

  The operator of the system should compile specific instructions for personnel training.
- The safety and functional reliability of the IR heating device are guaranteed only if you are using original accessories and spare parts from HP.
- After an emitter break, a dangerous voltage may be exposed to contact by the heating spiral.
- The reflector side should not be cleaned.

Clean the fusing-lamp glasses

1. Turn the assembly upside down and unscrew the four screws of the exterior glass frame.

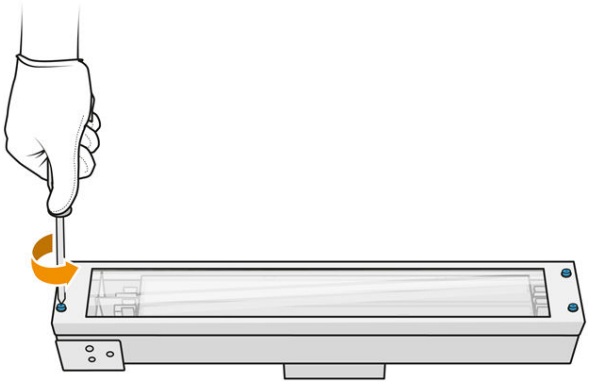

2. Carefully remove the frame of the exterior glass.

⚠ CAUTION: When you remove the frame, the glass may stick to it. Take care that the glass does not fall out of the frame as you pick it up.

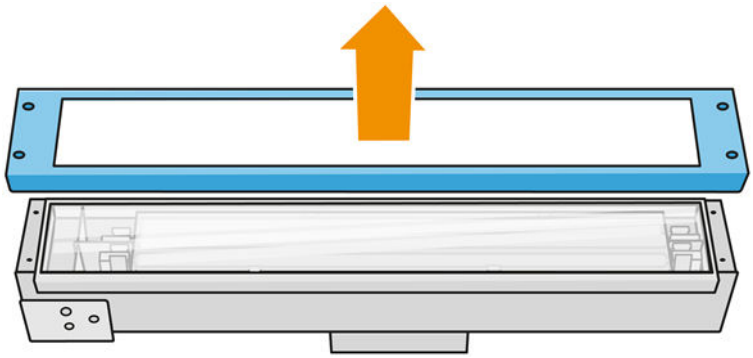

3. Remove the exterior glass and place it gently on a table or other flat surface.

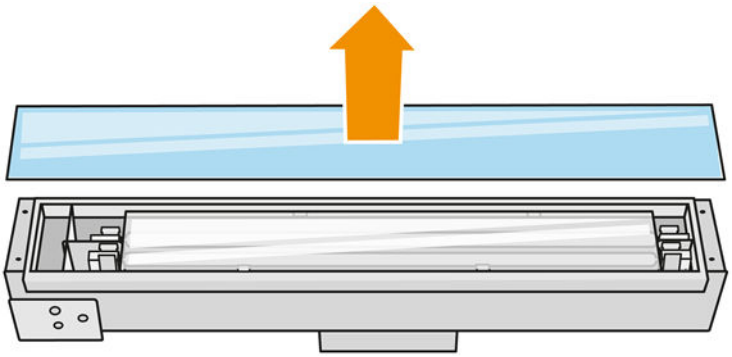

4. Moisten both sides of the glass with a lint-free cloth dampened with isopropyl alcohol.

NOTE: If you are in an area (such as California) that regulates VOC cleaning and maintenance fluids, instead of isopropyl alcohol use a VOC-certified cleaner such as a properly diluted Simple Green All-Purpose Cleaner.

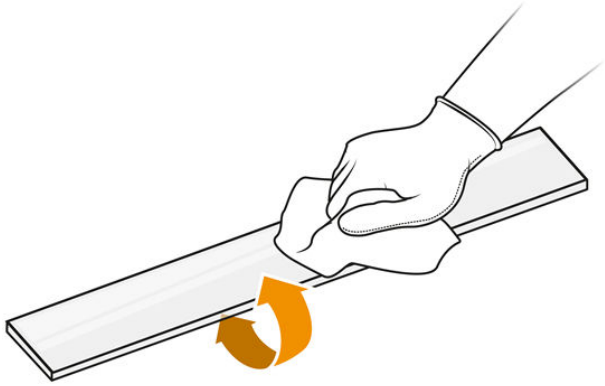

5. Continue cleaning until the glass is clean.

   If there is some plastic or material fused to the glass, clean it with a scourer.

6. Clean the frame using the same damp cloth.

7. Push the internal glass to the side, deforming the metal clips, and release the glass. Place it gently on a table or other flat surface.

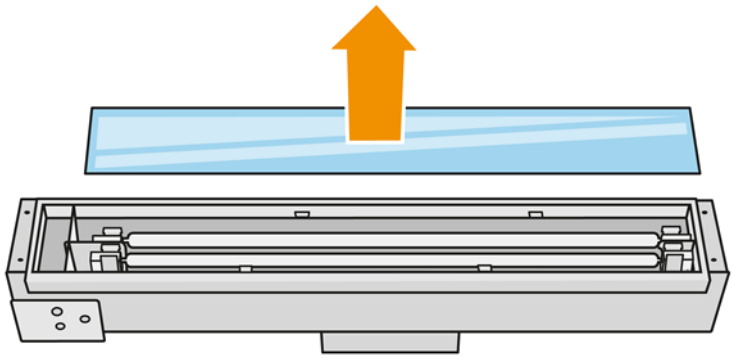

TIP: You can make this task easier by using a pair of the printed glass removal tools. Place two of them on the side where there are no holes, and slide it to the right to separate the pin.

8. Moisten both sides of the internal glass with a lint-free cloth dampened with isopropyl alcohol.

NOTE: If you are in an area (such as California) that regulates VOC cleaning and maintenance fluids, instead of isopropyl alcohol use a VOC-certified cleaner such as a properly diluted Simple Green All-Purpose Cleaner.

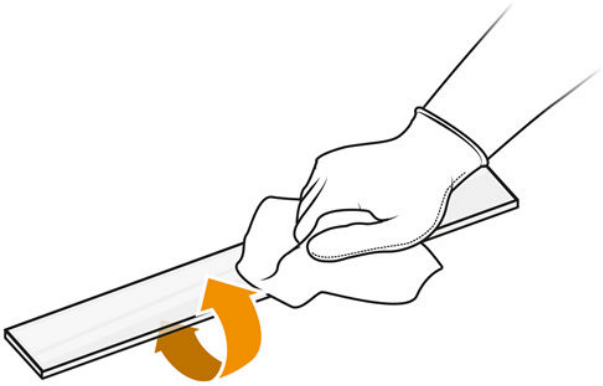

9. Continue cleaning until the glass is clean.

   If there is some plastic or material fused to the glass, dispose of the glass and insert a new glass: see Replace a fusing-lamp internal glass on page 177.

Reassemble the lamp glasses

1. Insert the internal glass by deforming the metal clips.
2. Add the frame with the outer glass, securing it with four screws.

Reassemble the fusing-lamp module

1. Turn the assembly upside down and put it back into the print carriage.
2. Tighten the captive screw.
3. Plug in the temperature camera cable and the lamp's main connector.
4. Plug in the sensor and the lamp's main connector.
5. Clip on the protective cover.
6. Tighten the captive screw in the protective cover at the front of the fusing-lamp assembly.

Finish cleaning

1. Close the top cover.
2. Ensure that all windows, covers, and doors are closed and remain in their original positions.
3. Turn on the printer.
4. Calibrate the fusing lamps. See Calibrate the fusing lamps on page 175.

Clean the recoater's left box and left rod

Prepare for cleaning

1. Ensure that the printer is not printing.
2. If a job has just been printed, wait about 20 minutes for the printer to cool down.
3. You are recommended to wear gloves.

4. Ensure that all windows, covers, and doors are closed and remain in their original positions.
5. Remove the build unit from the printer.
6. Turn off the printer.

Risk of burns

Crush hazard

Risk of trapped fingers

Hazardous moving part

Light radiation hazard

Electric shock hazard

For more safety information, see Safety precautions on page 6

Clean the recoater's left box and left rod

1. Open the build-unit door.

2. Locate the recoater's left box.

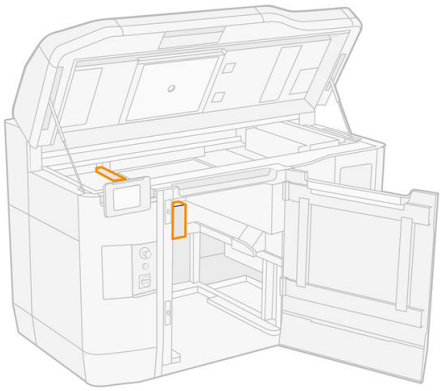

3. Use a flat screwdriver to remove four screws.

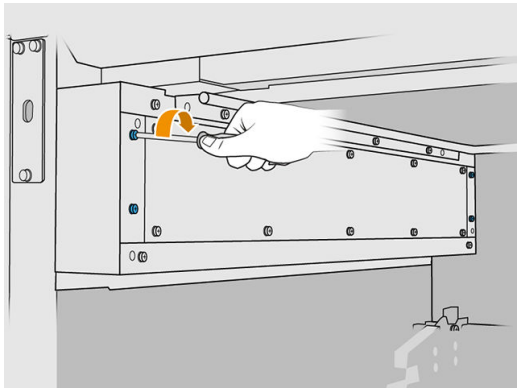

4. Remove the sheet-metal front plate to access the recoater's left box.

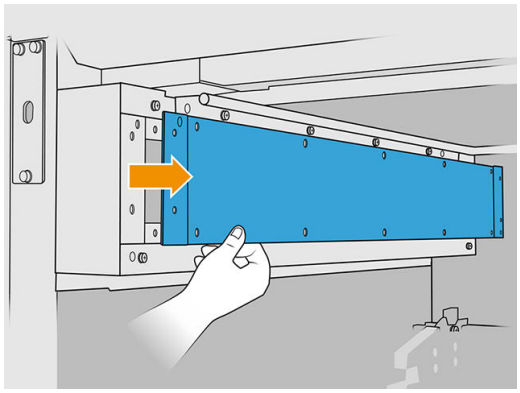

5. Clean the dust from the recoater's left box and rod, using an explosion-protected vacuum cleaner with a soft brush nozzle.

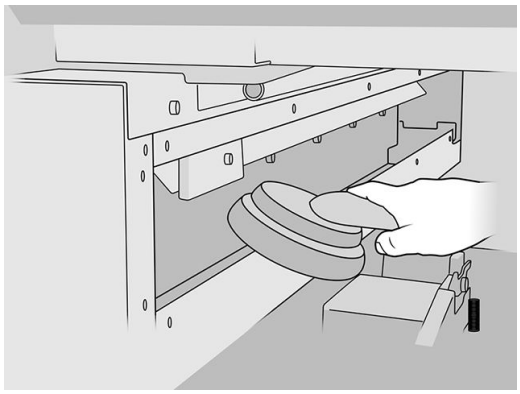

6. Wipe the left rod with a lint-free cloth dampened with isopropyl alcohol.

NOTE: If you are in an area (such as California) that regulates VOC cleaning and maintenance fluids, instead of isopropyl alcohol use a VOC-certified cleaner such as a properly diluted Simple Green All-Purpose Cleaner.

7. Continue cleaning with the cloth until the rod is clean.

Finish cleaning

1. Put back the front sheet metal, restoring the screws.
2. Close the build-unit door.

3. Close the top cover.
4. Ensure that all windows, covers, and doors are closed and remain in their original positions.
5. Turn on the printer.

Check the functionality of the Residual Current Circuit Breakers (RCCBs)

Following standard Residual Current Circuit Breaker (RCCB) recommendations, it is recommended that the RCCBs are tested on a yearly basis. The procedure is as follows:

1. Turn off the equipment from the front panel, not using the service switch.
2. Test that the RCCB works correctly by pressing the test button.
   - If the RCCB does not trip when the test button is pressed, this indicates that it has failed. The RCCB must be replaced for safety reasons; call your service representative to remove and replace the RCCB.
   - If the RCCB trips, this indicates it is working correctly; reset the RCCB to its normal on state.

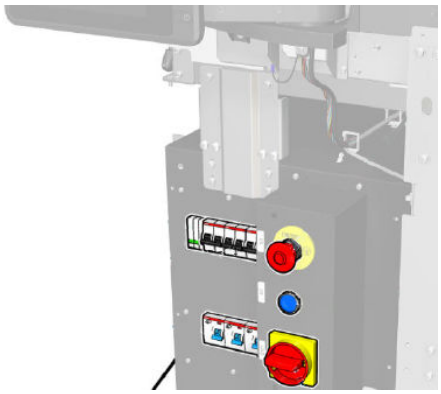

Check that the printer is correctly earthed

Check that the resistance between any metal part of the printer's internal chamber and the building's earth is less than 1 Ω.

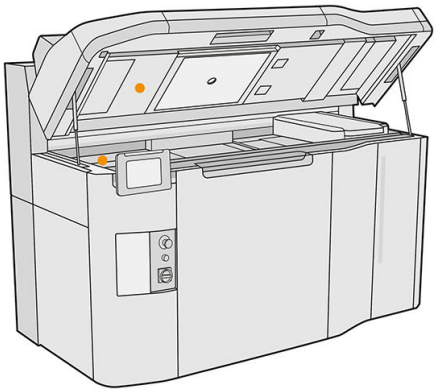

Clean the printhead contacts

Prepare for cleaning

1. Ensure that you have several dry cloths, isopropyl alcohol, and deionized water.

NOTE: If you are in an area (such as California) that regulates VOC cleaning and maintenance fluids, instead of isopropyl alcohol use a VOC-certified cleaner such as a properly diluted Simple Green All-Purpose Cleaner.

2. Ensure that the printer is not printing.
3. If a job has just been printed, wait about 20 minutes for the printer to cool down.
4. You are recommended to wear gloves.
5. If the build unit is in the printer, remove it.

Open covers

1. At the printer's front panel, tap , then **Printheads** > **Replace**.
2. Open the top cover.

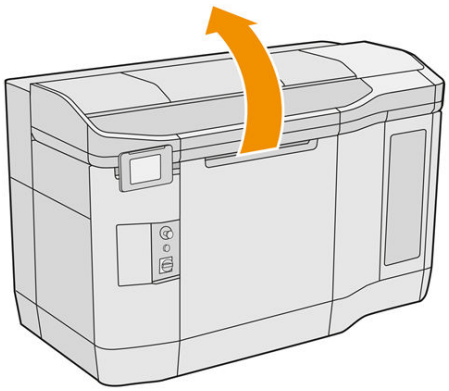

3. Pull the print-carriage handle to open its cover.

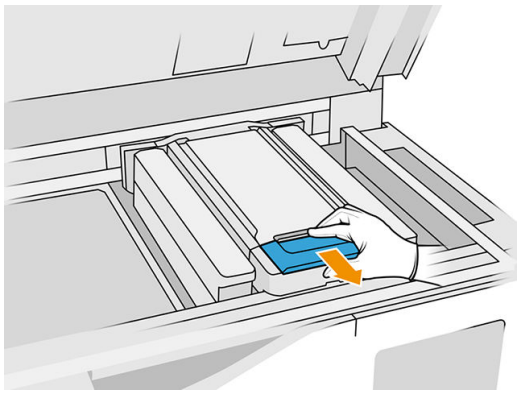

4. Lift the print-carriage cover.

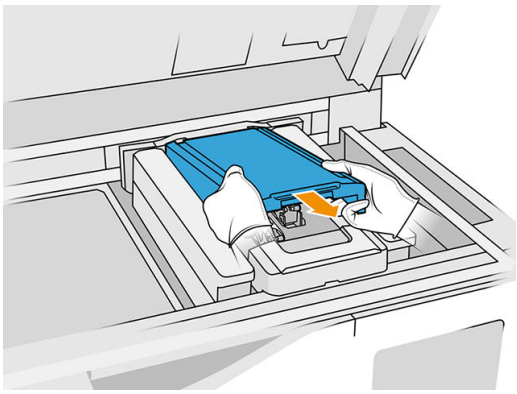

Clean the printhead contacts in the carriage

1. Carefully remove the three printheads from the carriage.
2. Turn off the printer.
3. Move the print carriage manually over the build unit space, slowly and carefully.
4. Illuminate the printhead slot in the carriage and check the electrical connections to the printhead for dirt.

5. Clean the right side of the printhead slot (not the side with the contacts) with a soft brush, such as a toothbrush.

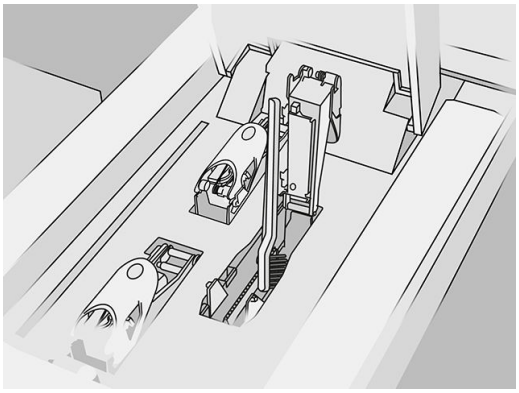

6. Wipe the printhead contacts with a cloth moistened with isopropyl alcohol, moving it up and down (not side to side).

NOTE: If you are in an area (such as California) that regulates VOC cleaning and maintenance fluids, instead of isopropyl alcohol use a VOC-certified cleaner such as a properly diluted Simple Green All-Purpose Cleaner.

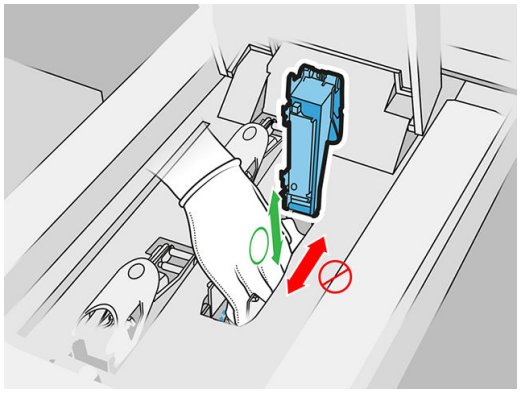

7. Illuminate the printhead slot again to check that the electrical connections are now clean and undamaged.

Clean the printhead contacts on the printhead

1. Place the printheads on a table.
2. Clean the parts of the printhead away from the contacts with a soft brush; and then with a cloth moistened with water.
3. Clean the contact side of the printhead with a cloth moistened with isopropyl alcohol.

NOTE: If you are in an area (such as California) that regulates VOC cleaning and maintenance fluids, instead of isopropyl alcohol use a VOC-certified cleaner such as a properly diluted Simple Green All-Purpose Cleaner.

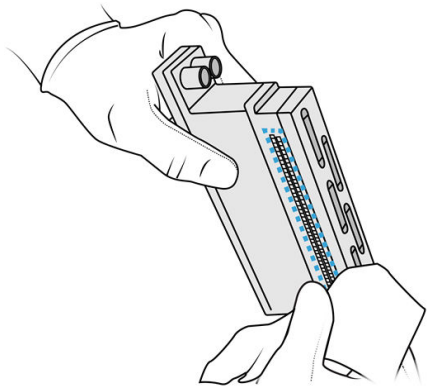

4. Clean the printhead nozzles with a cloth moistened with deionized water.

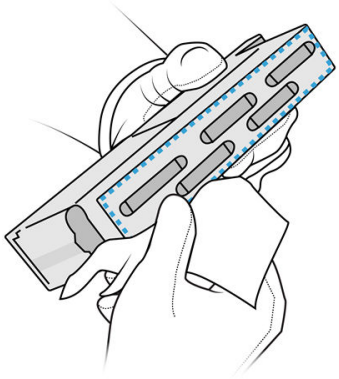

5. Wipe the printhead dry with a similar but dry cloth.

Finish cleaning

1. Wait until the contacts and other parts are dry.
2. Put back the print carriage cover.
3. Close the top cover.
4. Ensure that all windows, covers, and doors are closed and remain in their original positions.
5. Turn on the printer.
6. Start a printhead replacement from the front panel to reinsert the printheads in the normal way. See Replace a printhead on page 42.
7. Align the printheads. See Align the printheads on page 225.

Clean the print-zone window

Prepare for cleaning

1. Ensure that you have an absorbent all-purpose cloth.
2. Ensure that the printer is not printing.
3. If a job has just been printed, wait about 20 minutes for the printer to cool down.
4. You are recommended to wear gloves.
5. Ensure that all windows, covers, and doors are closed and remain in their original positions.

Clean the print-zone window

1. Open the top cover.

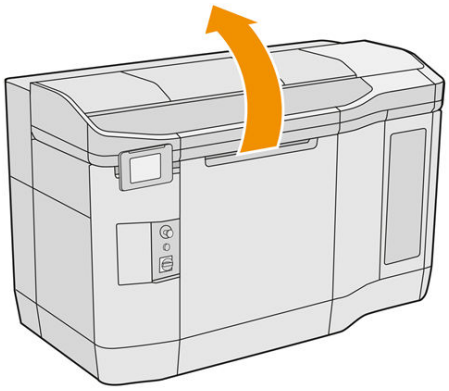

2. Locate the print-zone window.

3. Wipe the glass with an absorbent all-purpose cloth dampened with deionized water.

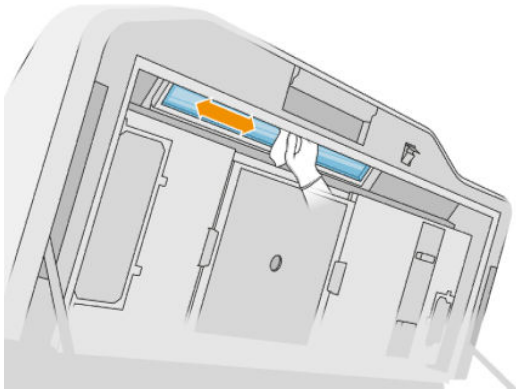

4. Close the top cover and clean the external part of the print-zone window.

Clean the recoating unit cover glass

First check whether your recoating unit has a glass cover: not all printers have one. If there is no glass cover, you can skip this procedure.

Prepare for cleaning

1. Ensure that the printer is not printing.
2. If a job has just been printed, wait about 20 minutes for the printer to cool down.
3. You are recommended to wear gloves and mask.
4. Ensure that all windows, covers, and doors are closed and remain in their original positions.

5. Open the top cover.

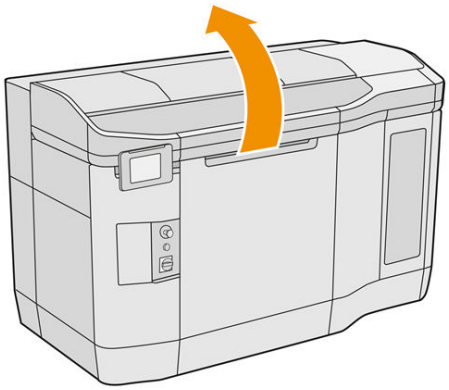

6. Move the recoating unit manually to the front, slowly and carefully.

Clean the recoating unit cover glass

1. Locate the recoating unit and use a flat screwdriver to remove four screws and the recoating unit cover.

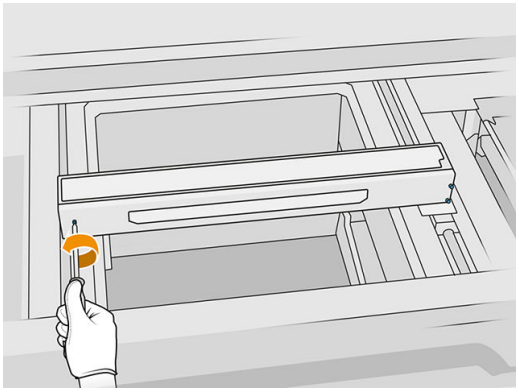

2. Place the recoating unit cover glass gently on a table or flat surface.
3. Wipe both sides of the glass with a lint-free cloth dampened with deionized water.

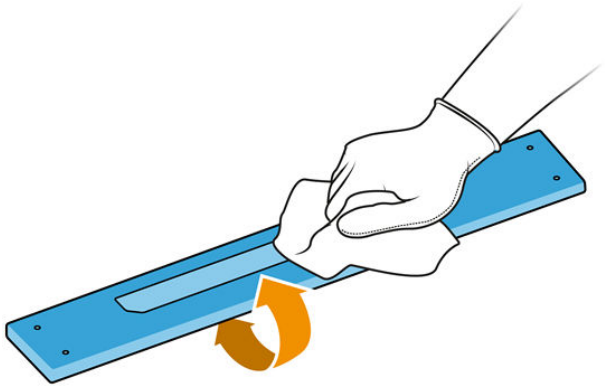

4. Scrub both sides of the glass with the scourer.
5. Continue cleaning with cloth and scourer until the glass is clean.
6. Clean the lid outlet using the same damp cloth.

Finish cleaning

1. Put back the recoating unit cover and attach it with the screws.
2. Close the top cover.
3. Ensure that all windows, covers, and doors are closed and remain in their original positions.

Replace the heating-lamp filter

Prepare for replacement

1. Heating-lamp filters are provided with your printer in the printer yearly maintenance kit.
2. Ensure that the printer is not printing.
3. If a job has just been printed, wait about 20 minutes for the printer to cool down.
4. You are recommended to wear gloves and mask.
5. Ensure that all windows, covers, and doors are closed and remain in their original positions.
6. Turn off the printer.

Risk of burns

Crush hazard

Risk of trapped fingers

Hazardous moving part

Light radiation hazard

Electric shock hazard

For more safety information, see Safety precautions on page 6

Replace the heating-lamp filter

1. Open the top cover.

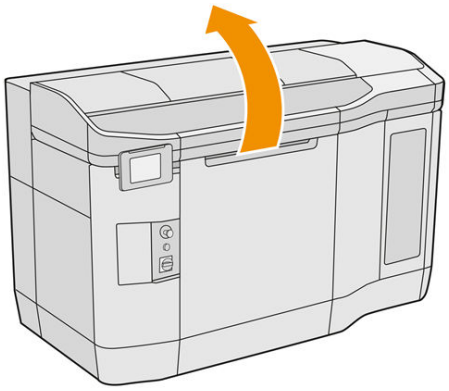

2. Locate the fan filter at the right of the top cover.

3. Remove the six screws and slide out the filter assembly.

⚠ CAUTION: The filter will fall out unless you hold it.

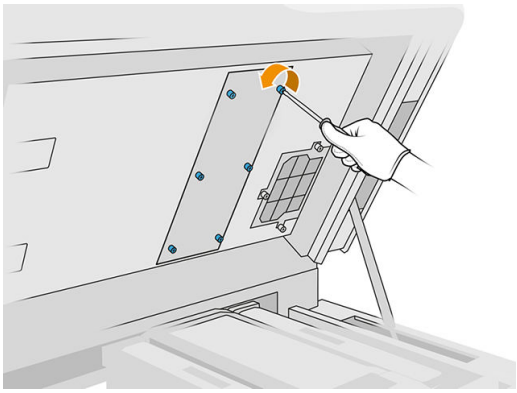

4. Slide the filter out of its frame.

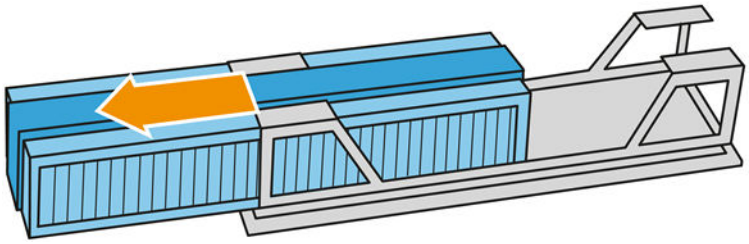

5. Remove and dispose of the old filter according to local regulations.
6. Insert the new filter into its frame.
7. Put back the filter grid and tighten its six screws.

Finish the replacement

1. Close the top cover.
2. Ensure that all windows, covers, and doors are closed and remain in their original positions.
3. Turn on the printer.

Replace the e-cabinet filter

Prepare for replacement

1. Replacement filters are provided with your printer in the printer yearly maintenance kit.
2. Ensure that the printer is not printing.
3. If a job has just been printed, wait about 20 minutes for the printer to cool down.
4. You are recommended to wear gloves, mask, and safety goggles.
5. Ensure that all windows, covers, and doors are closed and remain in their original positions.
6. Remove the build unit from the printer.
7. Turn off the printer.

Risk of burns

Crush hazard

Risk of trapped fingers

Hazardous moving part

Light radiation hazard

Electric shock hazard

For more safety information, see Safety precautions on page 6

Replace the e-cabinet filter

1. Locate the e-cabinet filter.

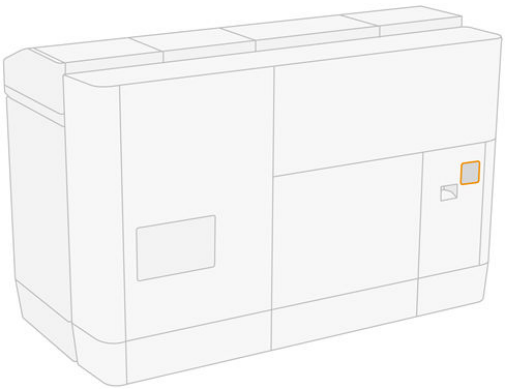

2. Unscrew four screws and remove the plastic filter cover.

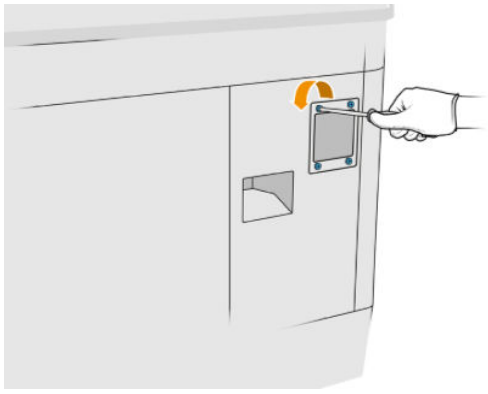

3. Remove and dispose of the old filter according to local regulations, and insert the new one.

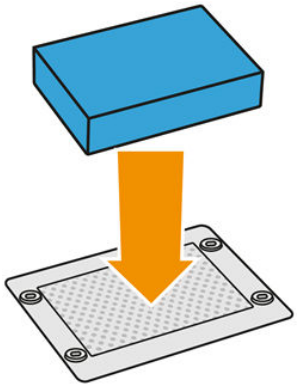

4. Carefully put back the filter cover and secure it with the screws.

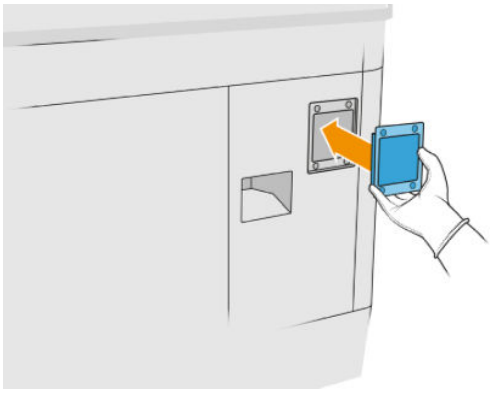

Finish replacement

1. Ensure that all windows, covers, and doors are closed and remain in their original positions.
2. Turn on the printer.

Replace the power-box fan filters

Prepare for replacement

1. Replacement fan filters are provided with your printer in the printer yearly maintenance kit. Only one set of filters is needed for this operation.
2. Ensure that the printer is not printing.
3. If a job has just been printed, wait about 20 minutes for the printer to cool down.
4. You are recommended to wear gloves, mask, and goggles.
5. Ensure that all windows, covers, and doors are closed and remain in their original positions.
6. Remove the build unit from the printer.
7. Turn off the printer.

Risk of burns	Crush hazard	Risk of trapped fingers	Hazardous moving part	Light radiation hazard	Electric shock hazard

For more safety information, see Safety precautions on page 6

Replace the power-box fan filters

1. Open the build-unit door.
2. Locate the power-box left fan filter and loosen the four captive screws.

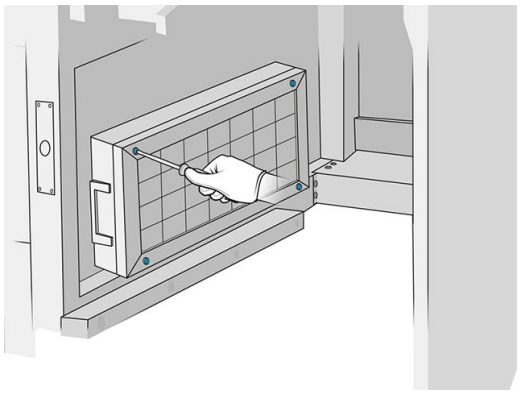

3. Remove the filter grid.

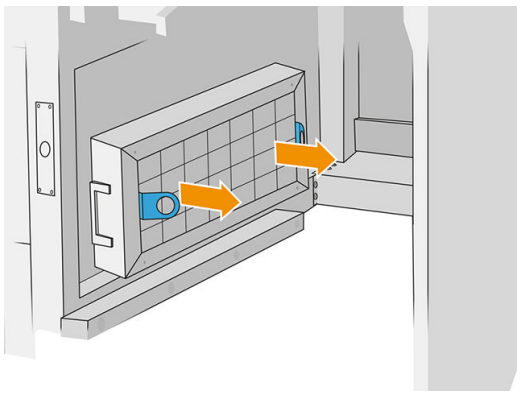

4. Remove and dispose of the old filter and insert the new one.
5. Put back the filter grid and tighten the screws.
6. Locate the power-box right fan filter.

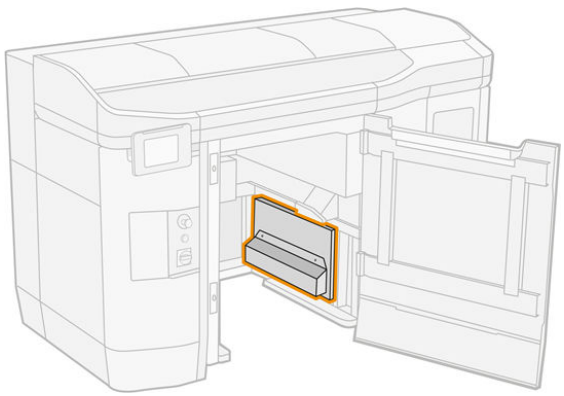

7. Loosen the two captive screws and remove the filter case.

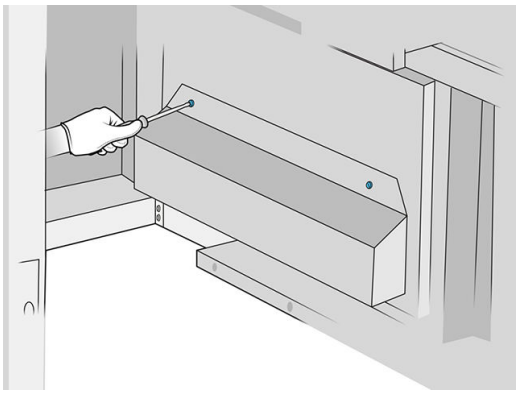

8. Remove and dispose of the old filter and insert the new one.

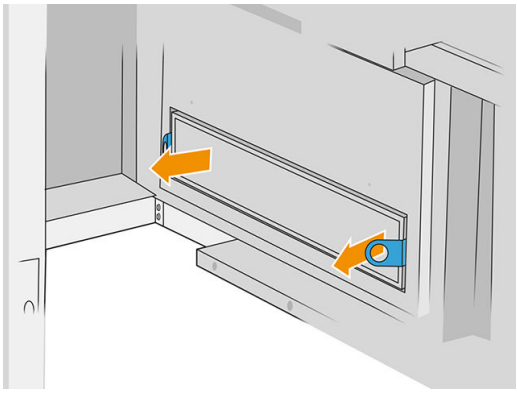

9. Put back the filter case and tighten the screws.

Finish replacement

1. Ensure that all windows, covers, and doors are closed and remain in their original positions.
2. Turn on the printer.

Replace the print-zone filter

Prepare for replacement

1. Print-zone filters are provided with your printer in the printer yearly maintenance kit. Sets of two filters are provided; only one filter is needed for this operation.
2. Ensure that the printer is not printing.
3. If a job has just been printed, wait about 20 minutes for the printer to cool down.
4. You are recommended to wear gloves and mask.
5. Ensure that all windows, covers, and doors are closed and remain in their original positions.
6. Turn off the printer.

Risk of burns	Crush hazard	Risk of trapped fingers	Hazardous moving part	Light radiation hazard	Electric shock hazard

For more safety information, see Safety precautions on page 6

Replace the print-zone filter

1. Locate the fan filters at the rear left of the printer.

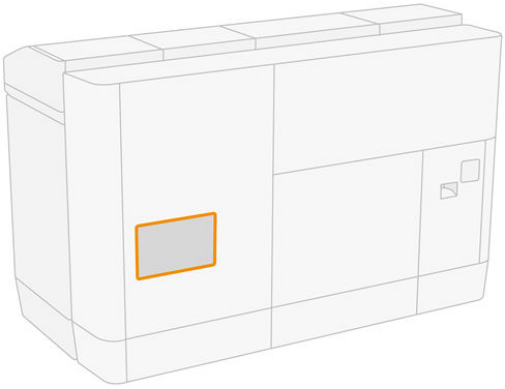

2. Remove eight screws, then remove the grid.

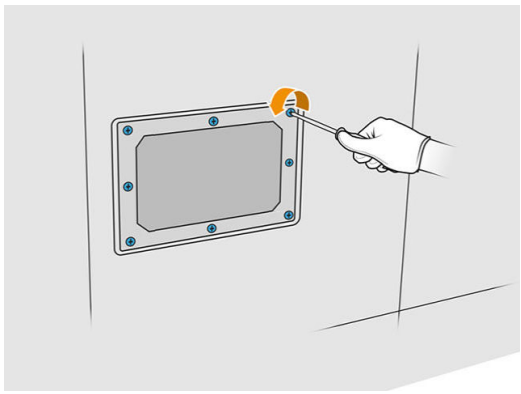

3. Pull the filter out of the frame and dispose of it according to local regulations.

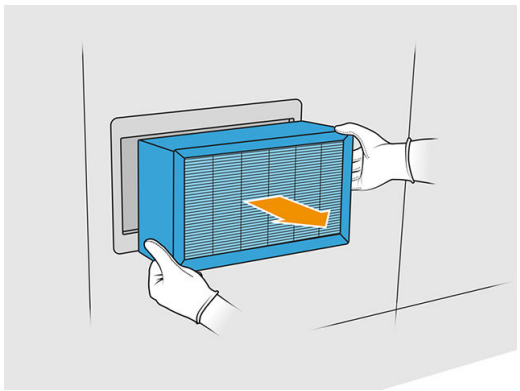

4. Insert the new filter provided in the kit.
5. Put back the filter grid and its screws.

Finish the replacement

1. Ensure that all windows, covers, and doors are closed and remain in their original positions.
2. Turn on the printer.
3. At the front panel, tap , then **Maintenance** > **Replace filters** > **Print zone**.

Replace the top-enclosure left and right fan filters

Replace the right or left top-enclosure filter when requested by the front panel. Tap , then **Other supplies** > **Replace**.

Prepare to replace

1. Top-enclosure left and right fan filters are provided with your printer in the printer initial maintenance kit. Only one set of filters is needed for this operation.
2. Ensure that the printer is not printing.
3. If a job has just been printed, wait about 20 minutes for the printer to cool down.
4. You are recommended to wear goggles and mask.

Replace the top-cover left and right fan filters

1. Open the top cover.

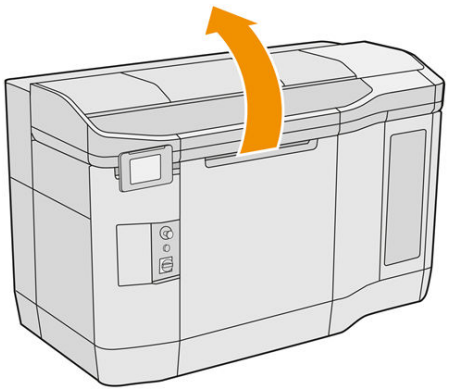

2. Locate the fan filters on the printer top cover at right and left.

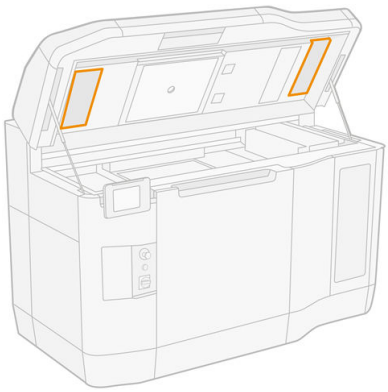

3. Unscrew the captive screws.

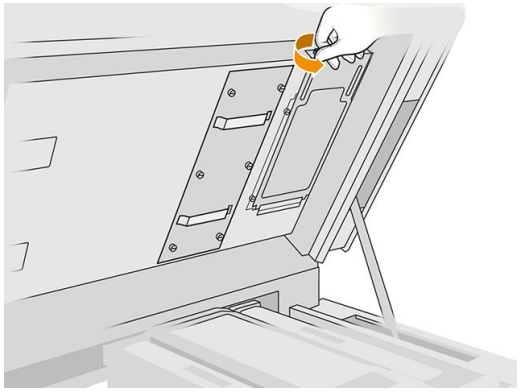

4. Remove the filter cover.

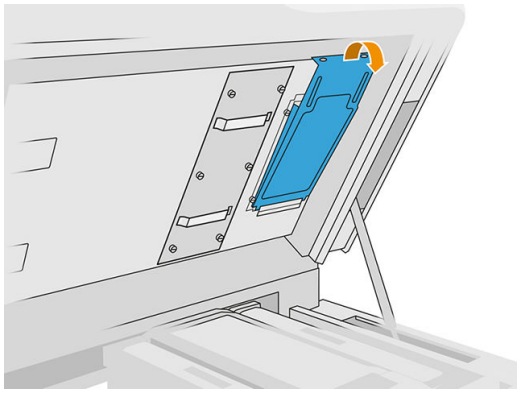

5. Remove each filter and dispose of it according to your local laws.

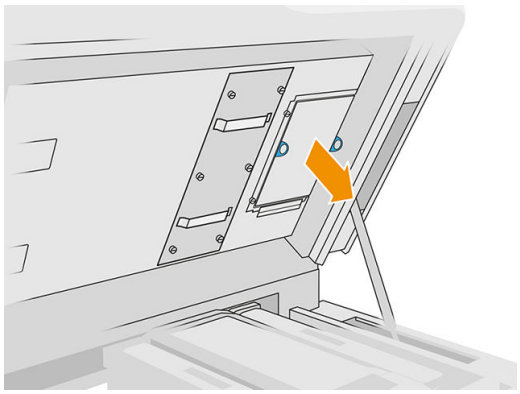

6. Put each filter back into the top cover (with the arrow pointing upwards), place the filter cover, and tighten the screws.

Replace a primer

Prepare for replacement

1. Ensure that you have the primers and latch kit.
2. Ensure that the printer is not printing.
3. If a job has just been printed, wait about 20 minutes for the printer to cool down.
4. You are recommended to wear gloves and goggles.

5. Ensure that all windows, covers, and doors are closed and remain in their original positions.
6. Turn off the printer.

Risk of burns

Crush hazard

Risk of trapped fingers

Hazardous moving part

Light radiation hazard

Electric shock hazard

For more safety information, see Safety precautions on page 6

Open covers

1. Open the top cover.

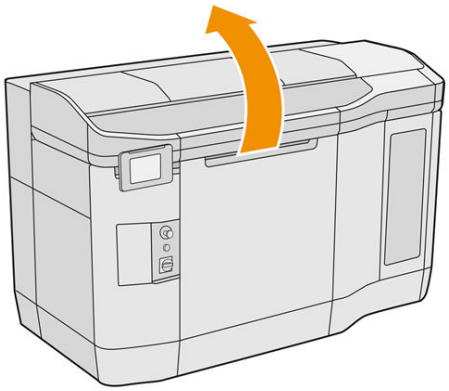

2. Pull the print-carriage handle to open its cover.

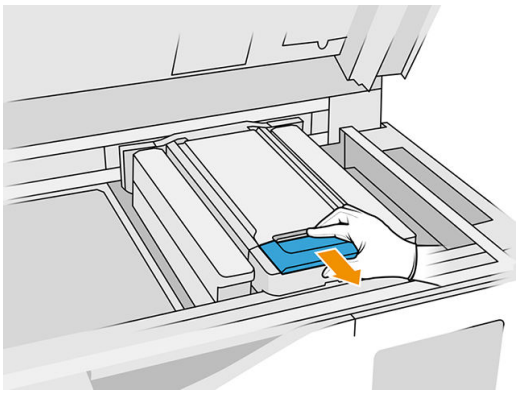

3. Lift the print-carriage cover.

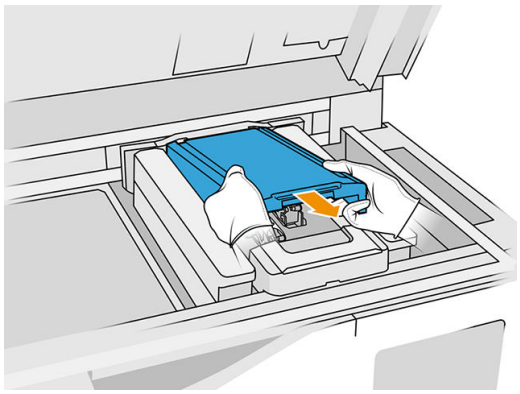

Replace a primer

1. Disconnect the primer cable, by disconnecting the white connector that you can find at the left side of the printhead whose primer is to be replaced.

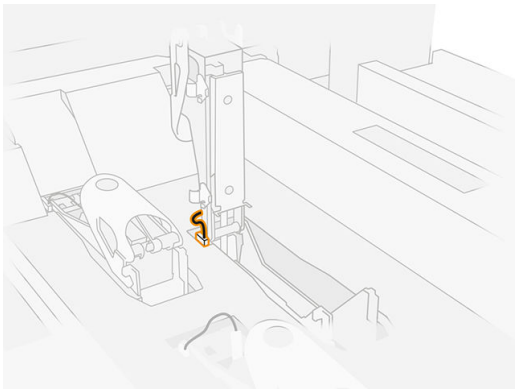

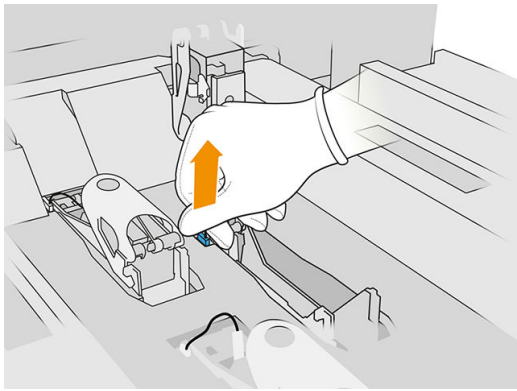

2. Open the printhead latch. It is not usually necessary to remove the printhead.

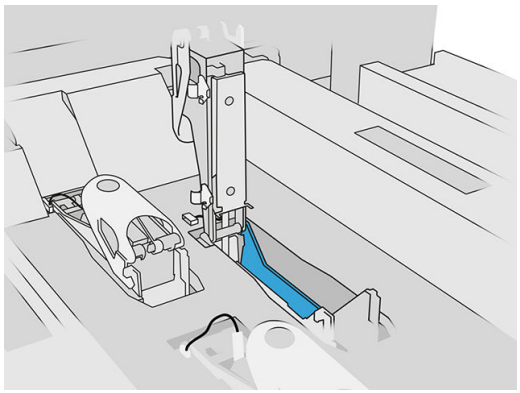

3. Remove the old latch and dispose of it according to local regulations.

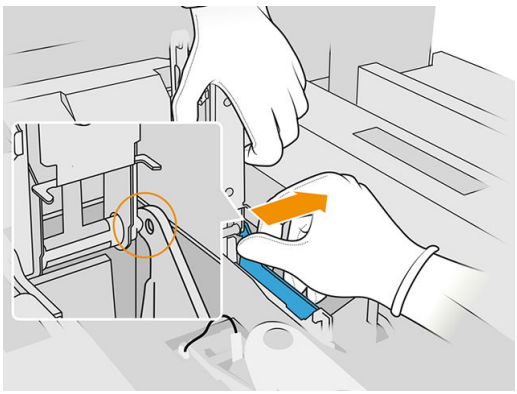

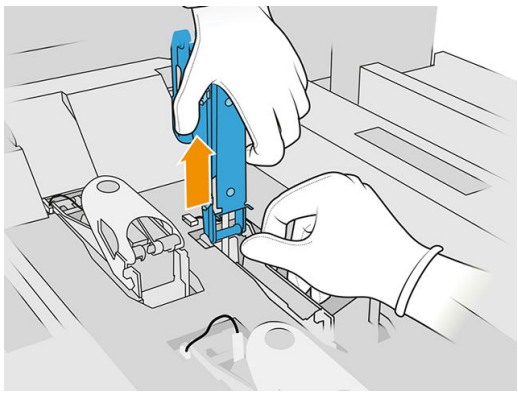

4. Connect the new latch primer cable.
5. Install the new latch with the primer.
6. Check that the new latch can move freely through the whole stroke.
7. Close the new latch.

Finish the replacement

1. Close the print-carriage cover.
2. Close the top cover.
3. Ensure that all windows, covers, and doors are closed and remain in their original positions.
4. Turn on the printer.
5. At the front panel, tap , then **System tools** > **Primer utilities** > **Primer check**, to test the primer functionality.
6. Tap , then **Maintenance** > **Printer reset counter** > **Reset printhead primer counter**, to reset the usage of the replaced primer to zero.

Replace a service-station cap module

Prepare for replacement

1. Ensure that you have the service station caps kit.
2. Ensure that the printer is not printing.
3. If a job has just been printed, wait about 20 minutes for the printer to cool down.
4. You are recommended to wear gloves and goggles.
5. Ensure that all windows, covers, and doors are closed and remain in their original positions.
6. Move the print carriage manually to the left, slowly and carefully, to access the capping station.

Replace a service-station cap module

1. Open the top cover to access the capping station.

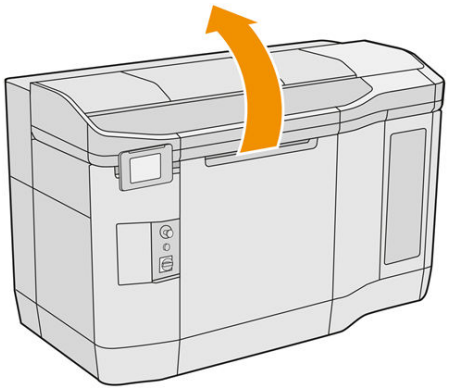

2. Remove the service-station cap, by pushing both snaps at the same time and rotating the cap about the y axis. Dispose of the old cap according to local regulations.

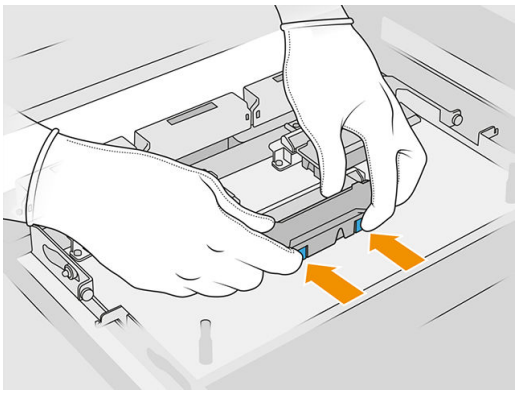

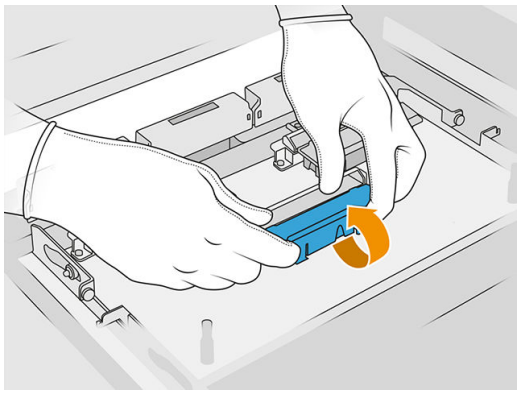

3. Place the new cap.

Finish the replacement

1. Close the top cover.
2. Ensure that all windows, covers, and doors are closed and remain in their original positions.
3. At the front panel, tap , then **System tools** > **Printer reset counter** > **Service-station cap replacement**.

Rubber-blade height adjustment

Adjustment objective

The wiper rubber-blade height adjustment is intended to calibrate the interference between the wiper and the printheads / carriage to its correct value. An interference too small would result in defective cleaning and lower printhead life while a too large interference would lead to mechanical problems and excessive rubber-blade wear.

When to perform this adjustment

With life and wiping routines, the rubber-blade wears decreasing the interference. To overcome the wear, the printer monitors the life of the wiper and will show an alert in the following cases:

- Rubber-blade mid-life: the rubber-blade is worn but still useable. Simply perform this adjustment to reset the interference to the appropriate one.

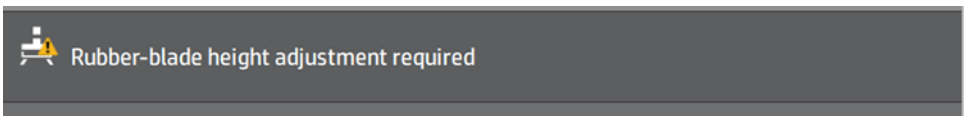

- Rubber-blade end of life: the rubber-blade must be replaced by a new one. See Replace the printhead cleaning roll's rubber blade on page 161.

  With the new blade, the interference will be incorrect. Perform this adjustment to reset it.

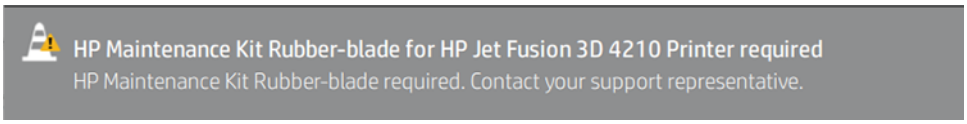

Procedure

1. At the Front Panel, go to **Settings** > **System tools** > **Calibrations** > **Rubber-blade height adjustment**.

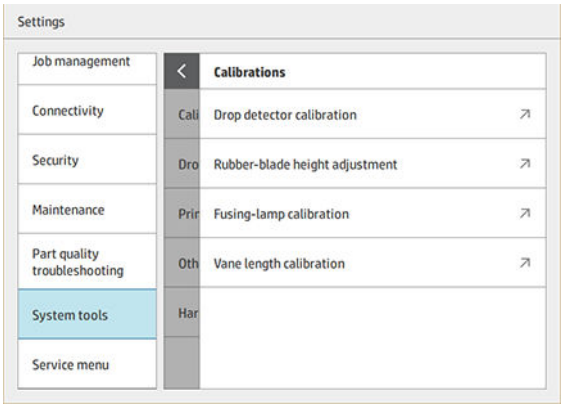

2. Close the Top cover and Rearm the printer if necessary.

3. At the question “Do you want to perform the wiper height and tilt adjustment?”, tap **OK**.

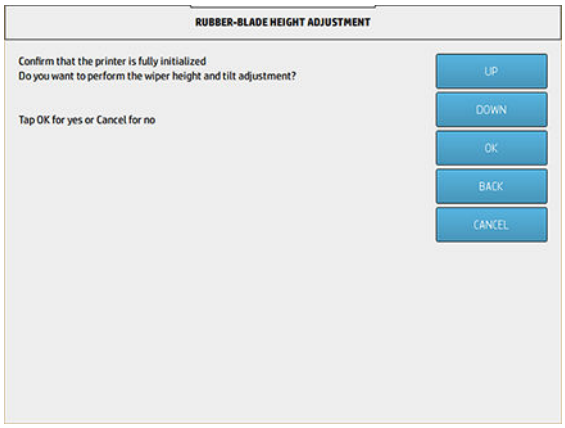

4. The printer will print a pattern on the wiper web. This pattern is “coarse” meaning that it is a rough estimation of the appropriate interference. When instructed, open the cover to evaluate the pattern.

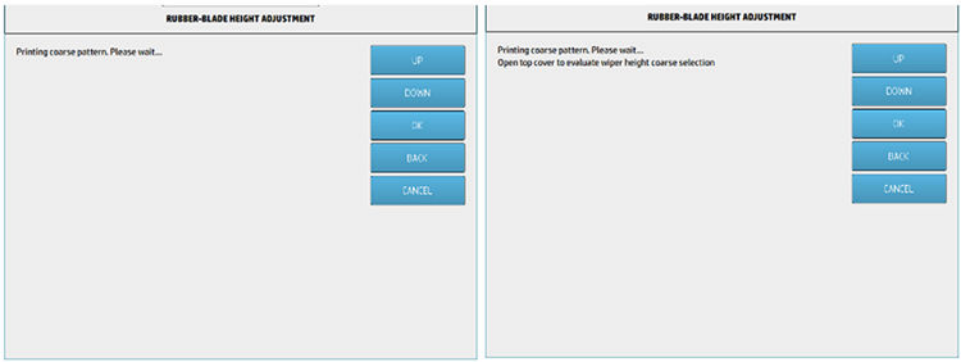

5. Look at the lines at the right side of the pattern (blue box) and, from right to left, count the number of “complete” lines.

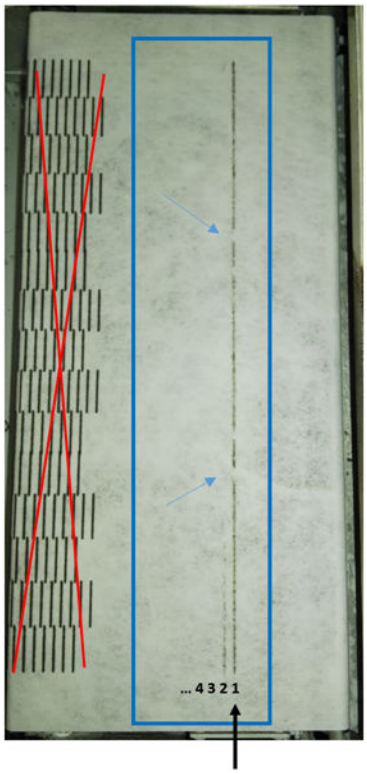

- Number of lines can go from 0 (none of them complete) to 9.
- In this case, the count is “1”.

NOTE: Any “broken” lines (see blue arrows) like the one in this picture are acceptable but they must span from top to bottom of the wiper.

6. Use the **UP** and **DOWN** keys in the Front Panel to enter the number of complete lines and press **OK** to continue. In the example above, “1” was entered:

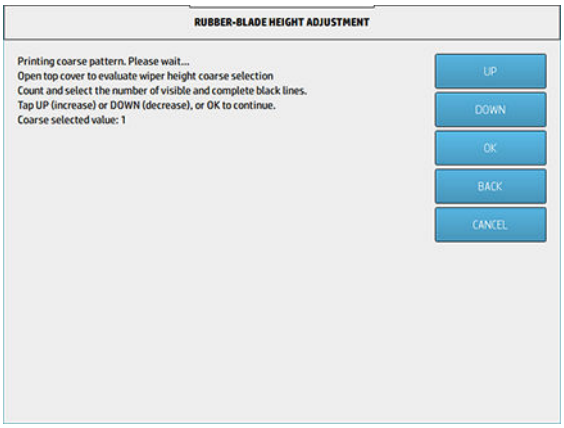

7. The printer will print a second pattern on the wiper web. This pattern is “fine”, trying to find the best interference around the adjustment selected in step 6. When instructed, open the cover to evaluate the pattern.

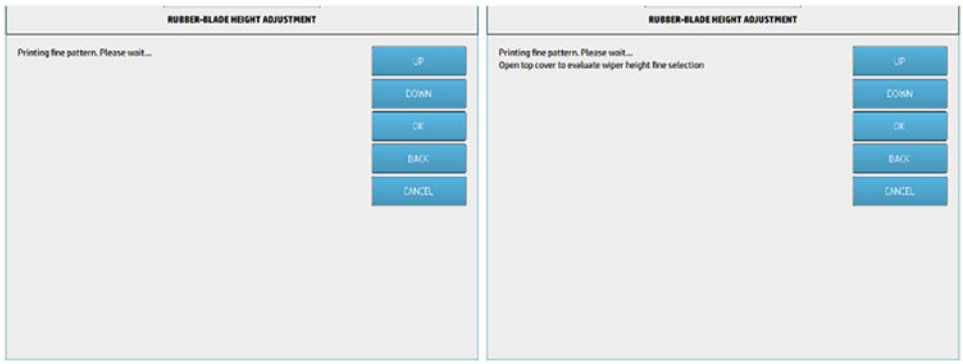

8. Once again, look at the lines at the right side of the pattern (blue box) and, from right to left, count the number of “complete” lines.

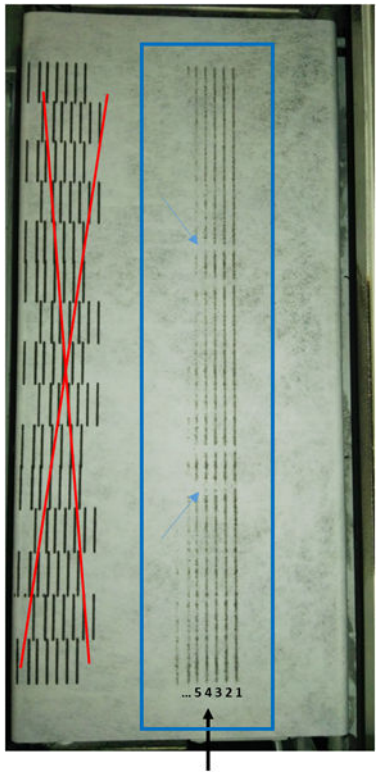

- The number of lines can go from 0 (none of them complete) to 7.
- In this case, the count is “4”.

NOTE: Any “broken” lines (see blue arrows) like the one in this picture are acceptable but they must span from top to bottom of the wiper.

IMPORTANT: If the number to be entered in this “fine” adjustment is “0” because there are no complete lines, the calibration will FAIL. In this case, please contact your support representative.

9. Use the **UP** and **DOWN** keys in the Front Panel to enter the number of complete lines and press **OK** to continue. In the example above, “4” was entered:

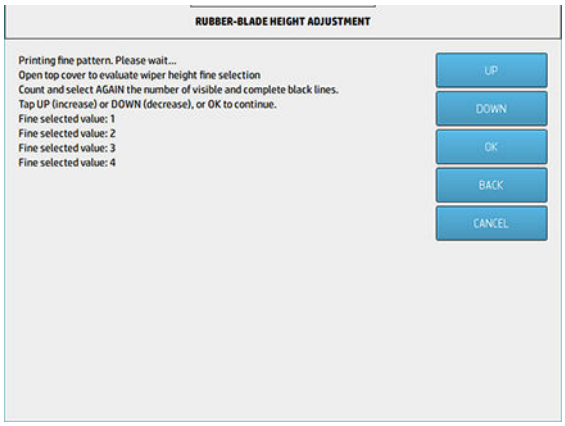

10. Press OK at the final screen to finish the process.

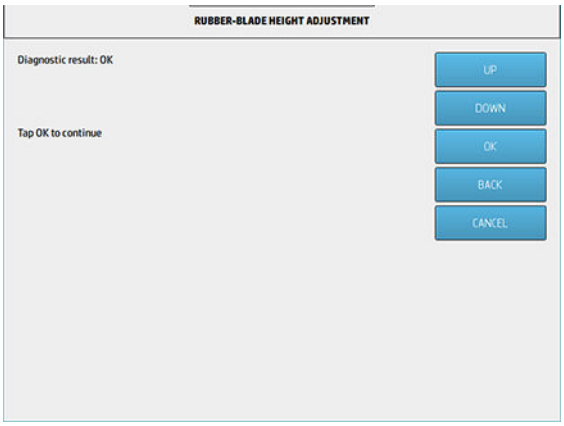

Replace the printhead cleaning roll's rubber blade

Prepare for replacement

1. Ensure that you have the printhead cleaning roll rubber blade kit, which is included in the printer initial maintenance kit, but can also be purchased separately.
2. Ensure that the printer is not printing.
3. If a job has just been printed, wait about 20 minutes for the printer to cool down.
4. You are recommended to wear gloves and goggles.
5. Open the agent door and the external cleaning-roll door.

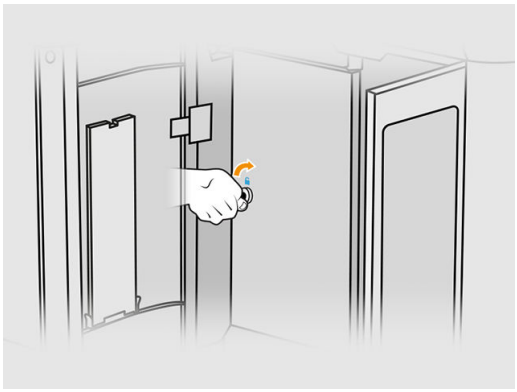

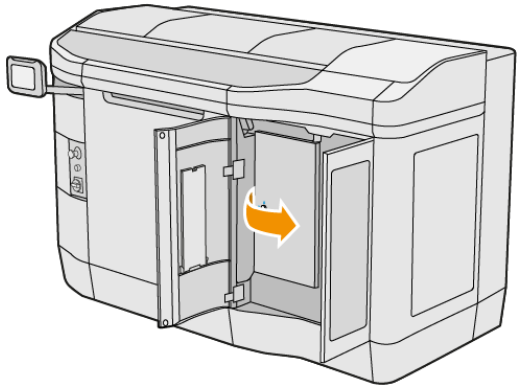

6. Open the top cover.
7. Pull the black knob at the top left and move the pinch system aside.

8. Move the printhead cleaning material aside to uncover the rubber blade.

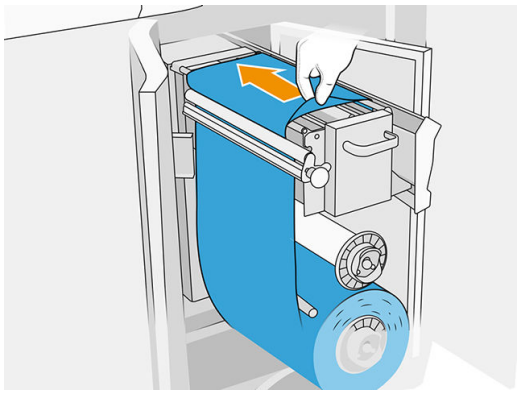

Replace the rubber blade

1. Use a Torx 15 screwdriver to remove two screws. While you unscrew them, you must hold the two spacers on the inside (otherwise, they will fall and might get lost).

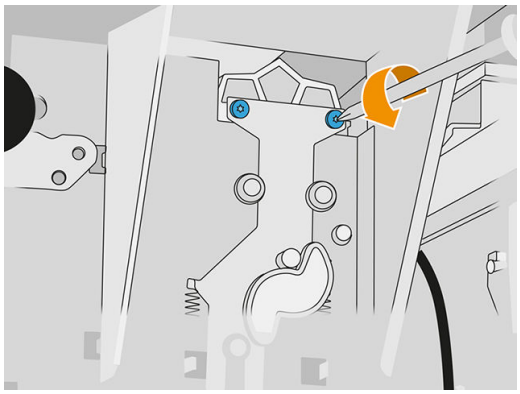

2. Remove the two spacers. Be careful not to lose them!

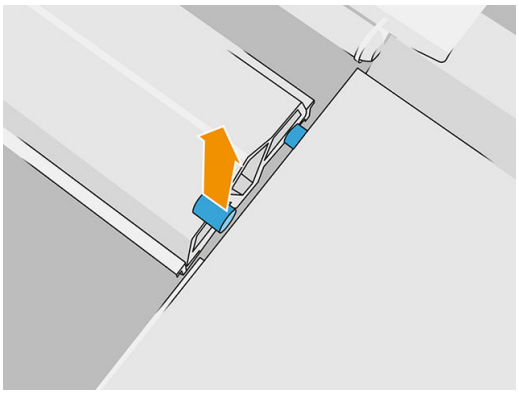

3. Remove and dispose of the old rubber blade according to local regulations, and insert the new one.

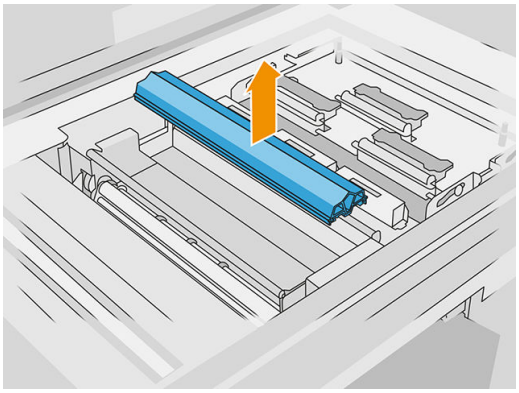

4. Reinsert and tighten each screw with one hand, while holding the spacer on the other side with the other hand.

Finish the replacement

1. Push the printhead cleaning material back into place, and close the pinch system (using the black plastic knob).
2. Close the printhead cleaning roll door and agent door.
3. At the front panel, tap , then **System tools** > **Printer reset counter** > **Reset rubber blade counter**.
4. Tap , then **System tools** > **Calibrations** > **Rubber-blade height adjustment**. Check Rubber-blade height adjustment on page 155 for more details.

Replace a service-station drop-detector module

Prepare for replacement

1. Ensure that you have the service station drop detectors kit.
2. Ensure that the printer is not printing.
3. If a job has just been printed, wait about 20 minutes for the printer to cool down.
4. You are recommended to wear gloves and goggles.
5. Ensure that all windows, covers, and doors are closed and remain in their original positions.

6. Move the print carriage manually to the left, slowly and carefully, to access the capping station.
7. Turn off the printer.

Risk of burns	Crush hazard	Risk of trapped fingers	Hazardous moving part	Light radiation hazard	Electric shock hazard

For more safety information, see Safety precautions on page 6

Replace a service-station drop-detector module

1. Open the agent door and the external cleaning-roll door.

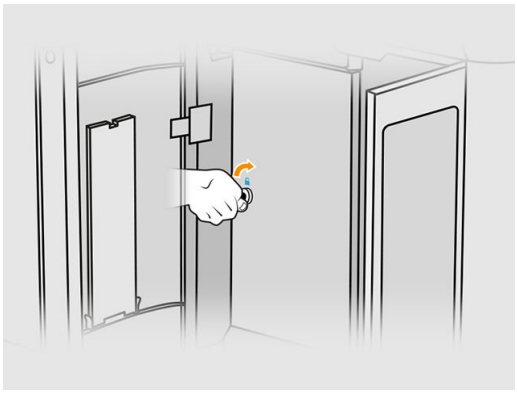

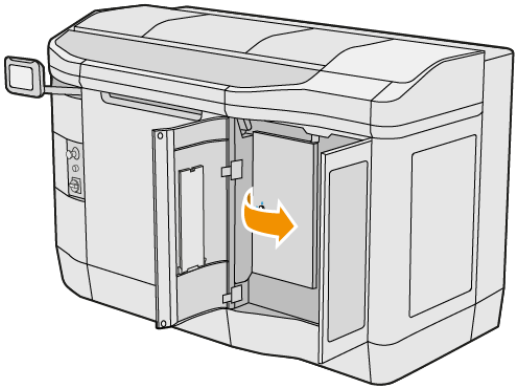

2. Locate the drop-detector cable to be replaced.

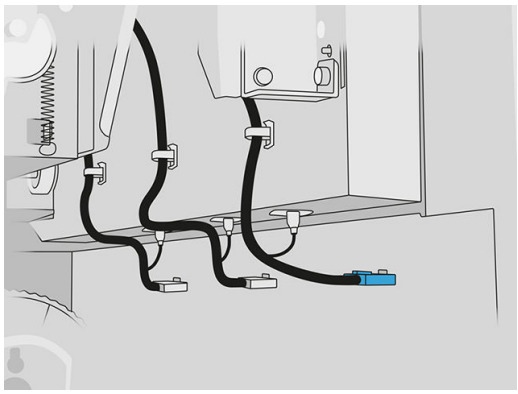

3. Disconnect the drop-detector cable from both connectors.

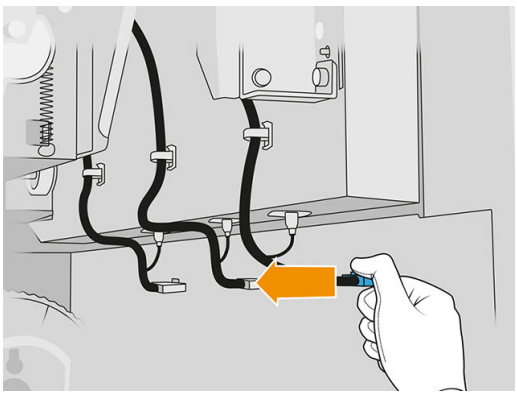

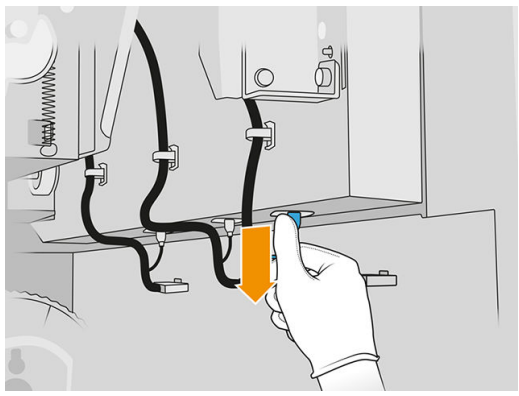

4. Remove the cable from its holder.

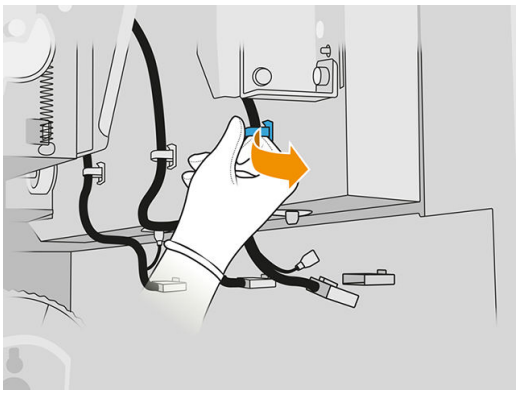

5. Open the top cover to access the drop-detection station.

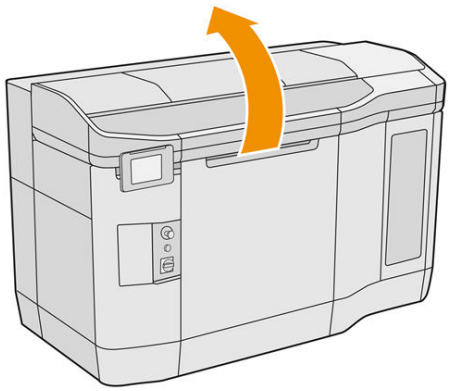

6. Use a Torx screwdriver to remove the screw.

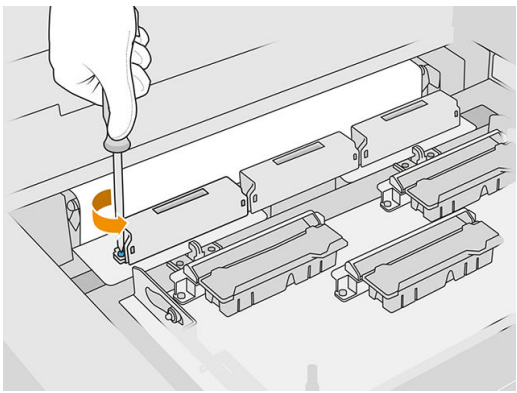

7. Rotate and remove the old drop detector, and dispose of it according to local regulations.

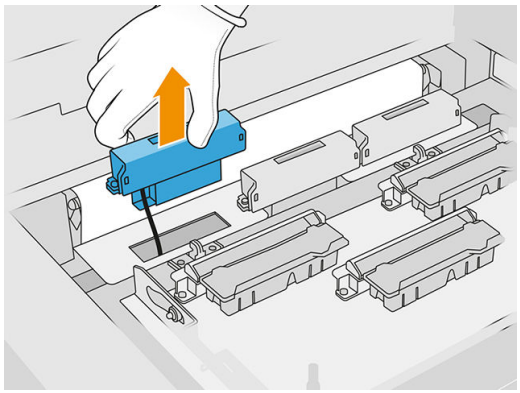

8. Perform the same operations in reverse to install the new drop detector.

⚠ CAUTION: Be careful to place the new drop detector on the right side of the belt.

9. Route the cable through its holder.

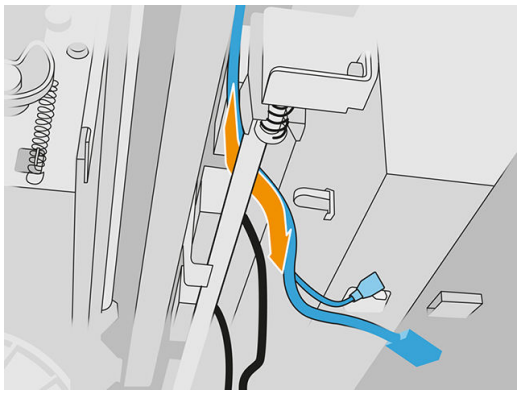

10. Connect the new drop-detector cable to its connectors.

Finish the replacement

1. Close the top cover.
2. Close the printhead cleaning roll door and agent door.
3. Ensure that all windows, covers, and doors are closed and remain in their original positions.
4. Turn on the printer.
5. At the front panel, tap , then **System tools** > **Printer reset counter** > **Drop detector replacement**.
6. Tap , then **System tools** > **Calibrations** > **Drop detector calibration**.
7. Tap , then **System tools** > **Drop detector utilities** > **Drop detector test**.

Replace the recoating roller and recoating plates

Prepare for replacement

1. Ensure that the printer is not printing.
2. If a job has just been printed, wait about 20 minutes for the printer to cool down.
3. You are recommended to wear gloves.
4. Ensure that all windows, covers, and doors are closed and remain in their original positions.
5. Open the top cover.

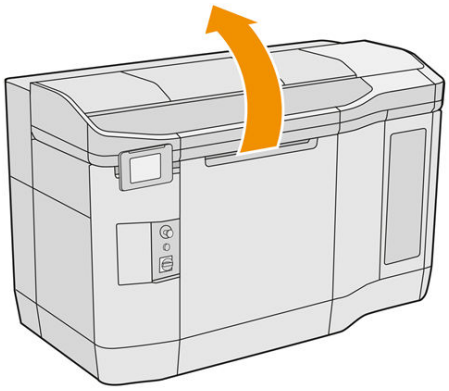

6. Remove the build unit from the printer, if it is present.
7. Move the recoating unit manually to the front, slowly and carefully.

Replace the recoating roller and recoating plates

1. Locate the recoating unit and use a flat screwdriver to remove four T15 screws.

⚠ CAUTION: Be careful not to drop the screws.

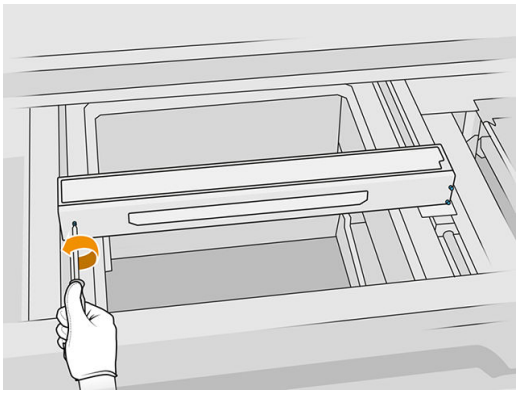

2. Remove the front lid. If necessary, clean the recoating unit cover glass gently with a dry cloth (see Clean the recoating unit cover glass on page 141).

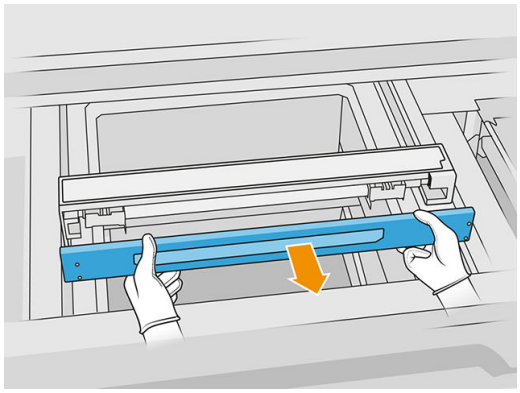

3. Slide the top sheet to one side until you can see the holes; do not remove it completely.

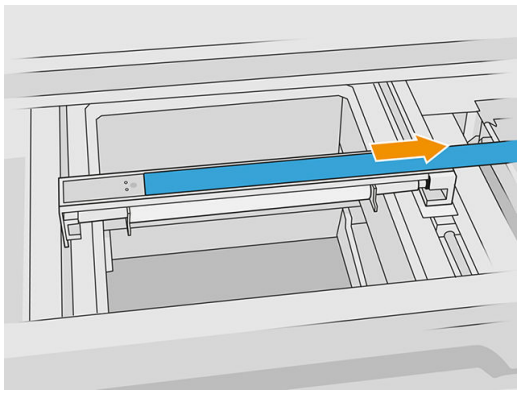

4. Remove two T10 screws.

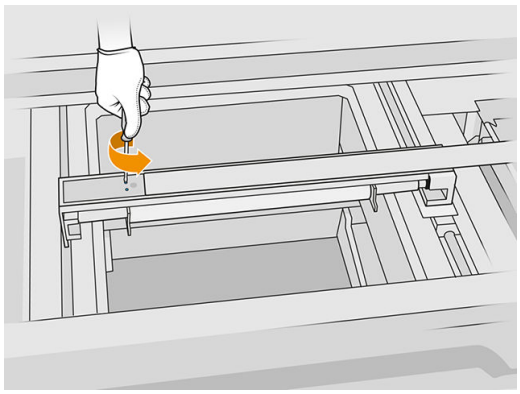

5. Repeat steps 3 and 4 on the other side.

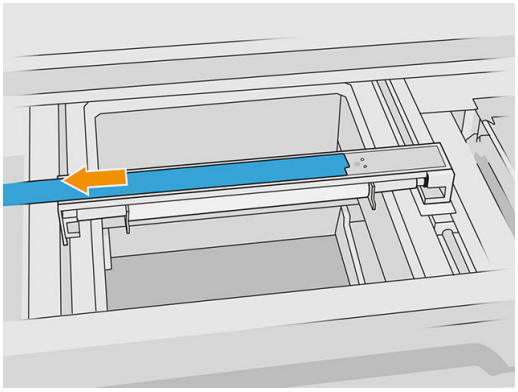

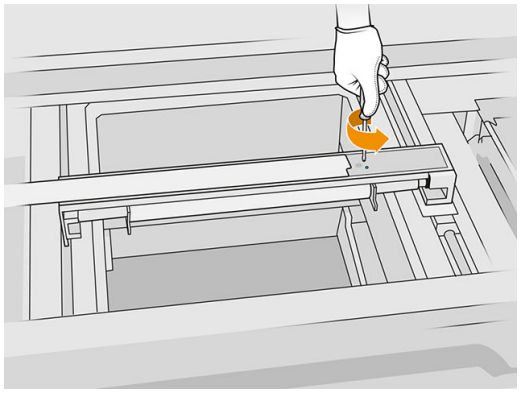

6. Remove the roller by pulling it towards you, and place it gently on a table or flat surface.

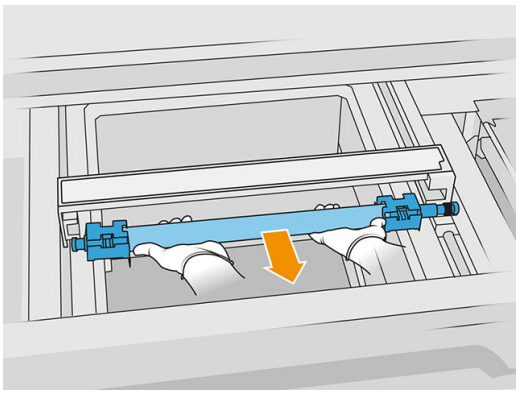

7. Insert the new recoating plates.
8. Carefully insert the new recoating roller by placing it and pushing it to the end.

NOTE: The gears should be on the right when placing the roller.

9. Align the plates with the line as shown below.

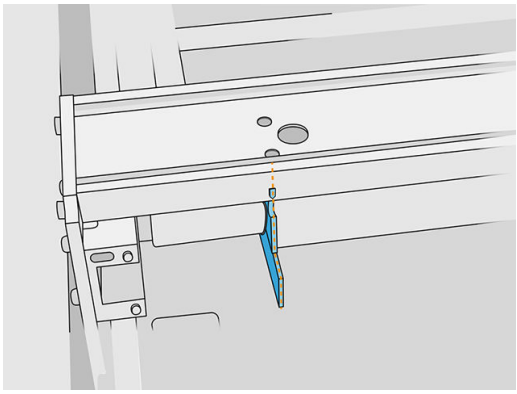

10. Secure the recoating roller with the top four screws.

TIP: Hold the plate up while tightening the top screws.

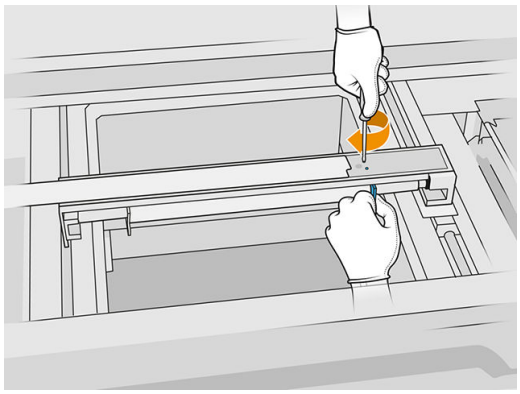

11. Put back the front lid of the recoating unit, but do not insert the screws yet.
12. Slightly rotate the recoating unit in both directions with your hand, ensuring that the roller gears are correctly engaged.

CAUTION: Some parts may be damaged if the gears are not correctly engaged when the lid is closed.

13. Attach the lid with the four T15 screws.

Finish the replacement

1. Close the top cover.
2. Ensure that all windows, covers, and doors are closed and remain in their original positions.

Replace the quartz glass of the heating lamps

Prepare for replacement

1. Ensure that the printer is not printing.
2. If a job has just been printed, wait about 20 minutes for the printer to cool down.
3. You are recommended to wear gloves.
4. Ensure that all windows, covers, and doors are closed and remain in their original positions.

Remove the quartz glass of the heating lamps

▲ See Remove the quartz glass of the heating lamps on page 125.

Finish the replacement

1. Close the top cover.
2. Ensure that all windows, covers, and doors are closed and remain in their original positions.

Replace the fusing lamps

At the printer's front panel, tap **Supplies** > **Fusing lamps** to see the status of each lamp:

- **Missing**: The lamp is missing.
- **Replace**: The lamp has been identified as faulty. It should be replaced by a functional lamp.

- **Wrong**: The lamp type is not suitable for this printer.
- **Not in warranty**: The lamp is no longer covered by warranty.

Prepare for replacement

1. Ensure that you have the fusing lamp kit, which is included in the printer initial maintenance kit, but can also be purchased separately.
2. Optionally, you can make this task easier by downloading and printing the glass removal tools. You can download the tool from http://www.hp.com/go/jetfusion3d4200/software.
3. Ensure that the printer is not printing.
4. If a job has just been printed, wait about 20 minutes for the printer to cool down.
5. You are recommended to wear cotton gloves and mask.
6. Ensure that all windows, covers, and doors are closed and remain in their original positions.
7. Turn off the printer.

Risk of burns

Crush hazard

Risk of trapped fingers

Hazardous moving part

Light radiation hazard

Electric shock hazard

For more safety information, see Safety precautions on page 6

Remove the fusing-lamp module

▲ See Remove the fusing-lamp module on page 128.

Disconnect the fusing-lamp module

1. Disconnect the four lamp connectors.

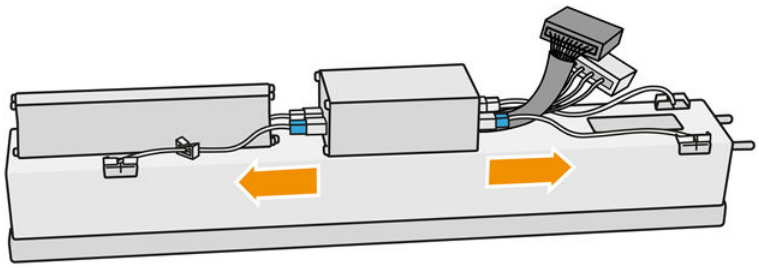

2. Release the cable from two cable ties.

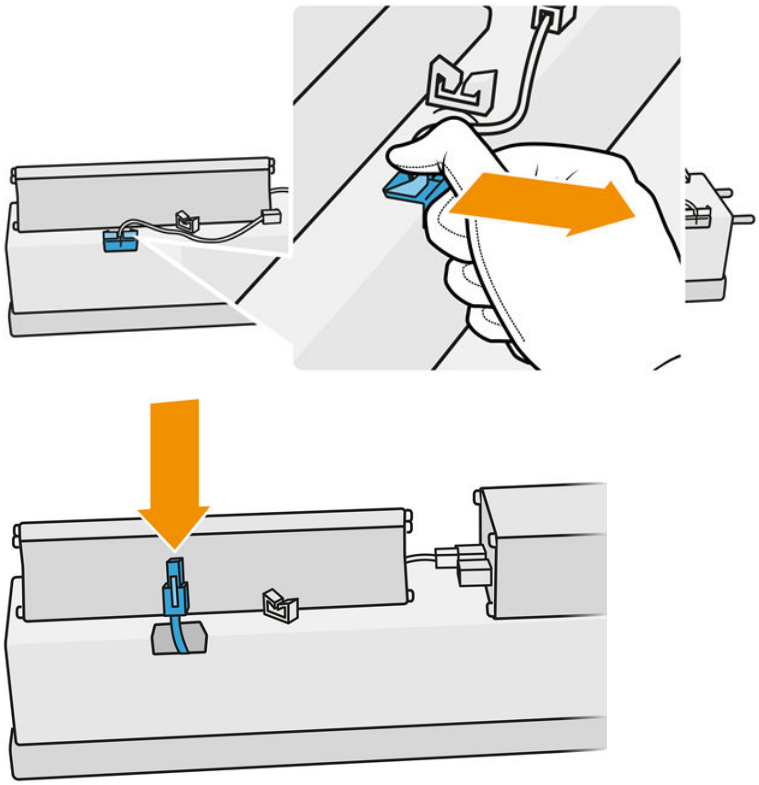

Safety precautions for the fusing-lamp emitter

- Disregard of the safety precautions or improper operation of the infrared emitter can lead to injuries and material damage.
- The IR heating device should be operated only by specialists or trained personnel.

  The operator of the system should compile specific instructions for personnel training.
- The safety and functional reliability of the IR heating device are guaranteed only if you are using original accessories and spare parts from HP.
- After an emitter break, a dangerous voltage may be exposed to contact by the heating spiral.
- The reflector side should not be cleaned.

Transport and handling of the fusing-lamp emitter

- Transport the IR emitter, in the packaging provided, to the place of installation.

  ⚠ CAUTION: If the IR emitter must be transported without its packaging, wear linen gloves. Fingerprints on the quartz tube will cause devitrification, which leads to radiation losses and mechanical failure.
- Always carry the emitter with both hands. Carry it so that the cross-section faces up, to avoid bending and breaking.
- Grip the emitter only by the glass tube, and not by the connection cable, pinches, or ceramics.
- Avoid any pressure on the flat base.

When installing IR emitters

- HP recommends that you wear protective goggles when installing or replacing emitters, to protect yourself from broken glass that you may come into contact with.
- Pulling the connection cable should not cause any tension to the flat base. Bending radius of connection cable: > 30 mm.
- The safety and functional reliability of the IR heating device are guaranteed only when using original accessories and spare parts from HP.
- After an emitter break, a dangerous voltage may be exposed to contact by the heating spiral.
- The reflector side should not be cleaned.

After installation, the quartz glasses of the IR emitter must be cleaned of any soiling or perspiration. See Clean the fusing-lamp glasses on page 127.

Replace the fusing lamp

Optionally, you can make this task easier by downloading and printing the glass removal tools. You can download the tool from http://www.hp.com/go/jetfusion3d4200/software.

1. Turn the assembly upside down and unscrew the four screws of the exterior glass frame.

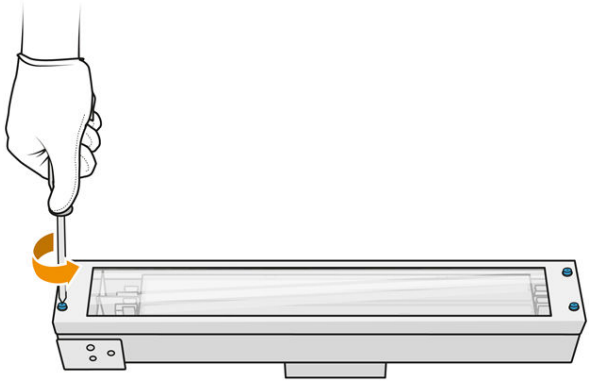

2. Carefully remove the frame of the exterior glass.

⚠ CAUTION: When you remove the frame, the glass may stick to it. Take care that the glass does not fall out of the frame as you pick it up.

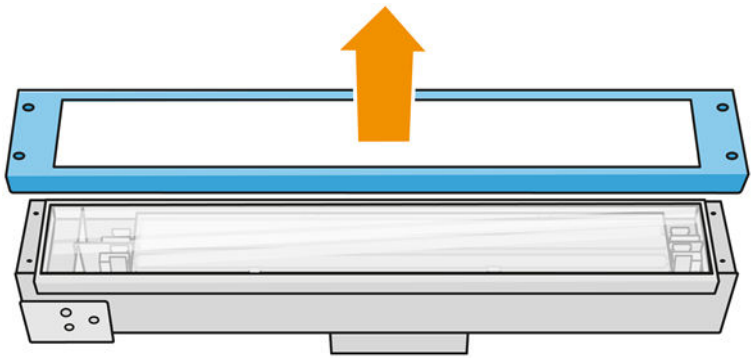

3. Remove the exterior glass.

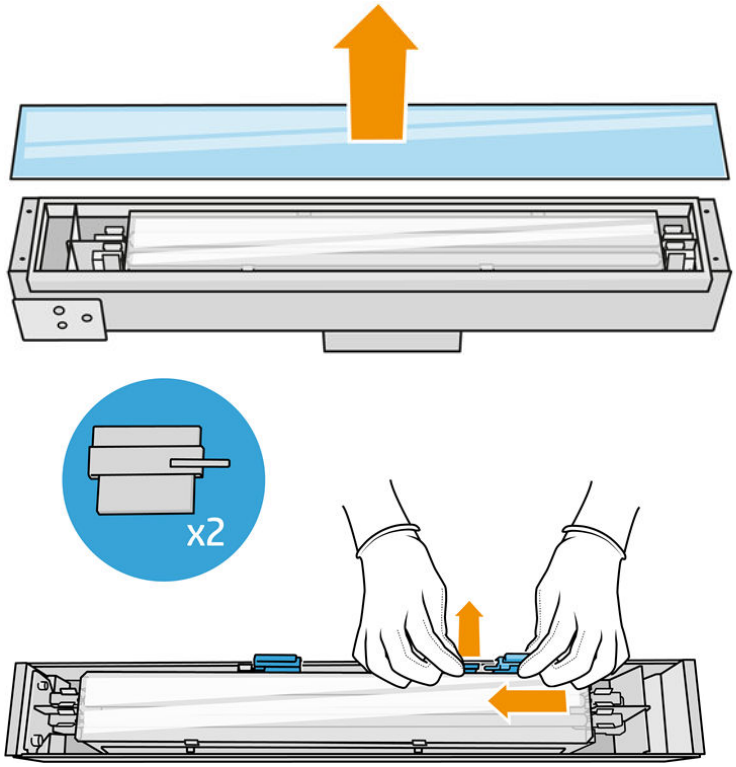

4. Push the internal glass to the side and release the glass.

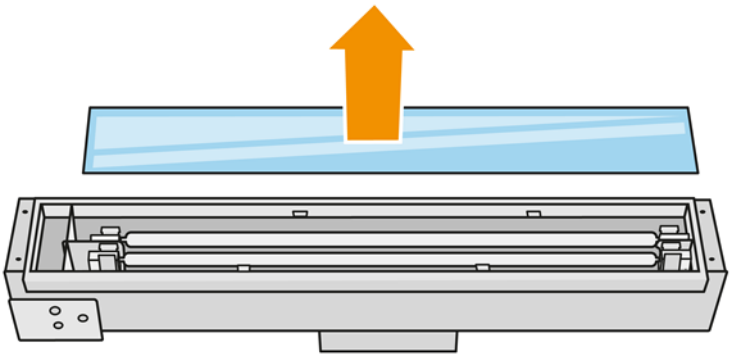

TIP: You can make this task easier by using a pair of the printed glass removal tools. Place two of them on the side where there are no holes, and slide it to the right to separate the pin.

5. Remove the old lamp and its cable by pulling them up through the released space on both sides, and dispose of them according to local regulations.

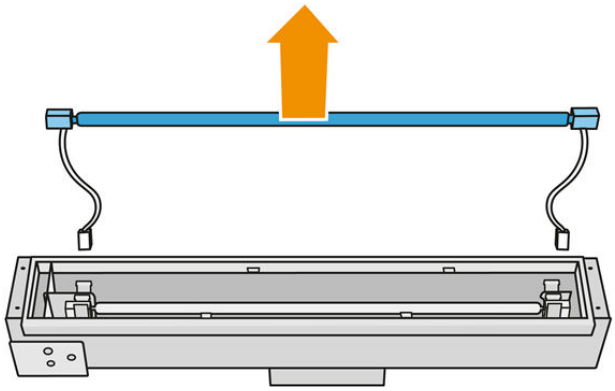

6. Carefully install the new lamp. Leave the golden side down towards the interior of the module.

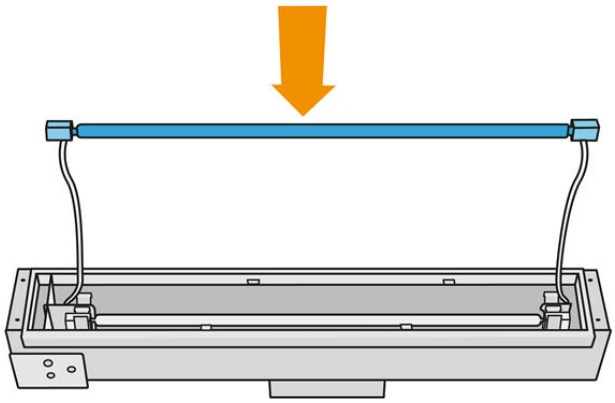

The lamp is symmetrical, but there are different connectors at the two ends, so only one position is feasible. Insert the lamps into the metal clips and route the cable connector through the grommet, taking into account the plug type of the connector box. The cables should be routed straight and not crossed.

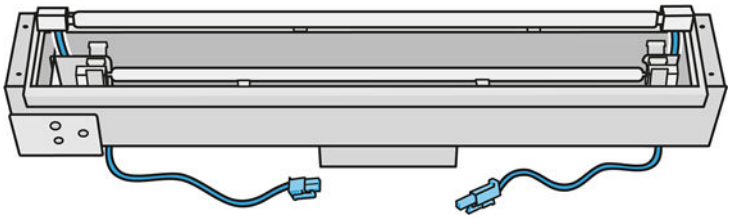

7. Insert the internal glass. Remember that the side tabs must always remain below the glass.

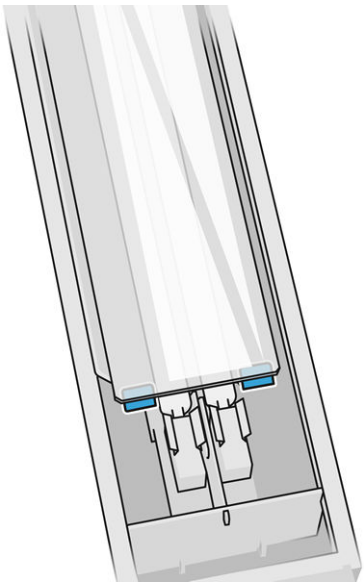

8. Remove the glass removal tools.
9. Add the frame with the outer glass, securing it with four screws.
10. Turn the assembly upside down and secure the cable with two cable ties.
11. Connect the four lamp connectors.

Reassemble the fusing-lamp module

▲ See Reassemble the fusing-lamp module on page 133.

Finish the replacement

1. Close the top cover.
2. Tap **Finish**.
3. Turn on the printer.
4. At the front panel, tap , then **System tools** > **Printer reset counter** > **Fusing lamps replacement**.
5. Dispose of the old fusing lamp according to local regulations.
6. Calibrate the fusing lamps. See Calibrate the fusing lamps on page 175.

Calibrate the fusing lamps

Prepare for calibration

1. Ensure that the printer is not printing.
2. Clean the black calibration plate with a cloth dampened with water.
3. Clean the fusing lamp glasses. See Clean the fusing-lamp glasses on page 127.
4. The printer needs to be completely cooled for correct calibration. Leave the top cover open for one hour before proceeding.
5. Insert a clean build unit.
6. Add material in the build chamber, about 4 mm.

Calibrate the fusing lamps

1. At the front panel, tap , then **System tools** > **Calibrations** > **Fusing lamps calibration**.
2. Follow the instructions on the front panel. Allow 20–30 minutes to complete the process.

TIP: If the calibration fails, clean the fusing-lamp glasses and try again. See Clean the fusing-lamp glasses on page 127.

Replace a fusing-lamp external glass

Prepare for replacement

1. Ensure that you have the fusing lamp glass kit.
2. Ensure that the printer is not printing.
3. If a job has just been printed, wait about 20 minutes for the printer to cool down.
4. You are recommended to wear gloves and mask.
5. Ensure that all windows, covers, and doors are closed and remain in their original positions.
6. Turn off the printer.

Risk of burns

Crush hazard

Risk of trapped fingers

Hazardous moving part

Light radiation hazard

Electric shock hazard

For more safety information, see Safety precautions on page 6

Remove the fusing-lamp module

▲ See Remove the fusing-lamp module on page 128.

Replace the fusing-lamp external glass

1. Turn the assembly upside down and unscrew the four screws of the exterior glass frame.

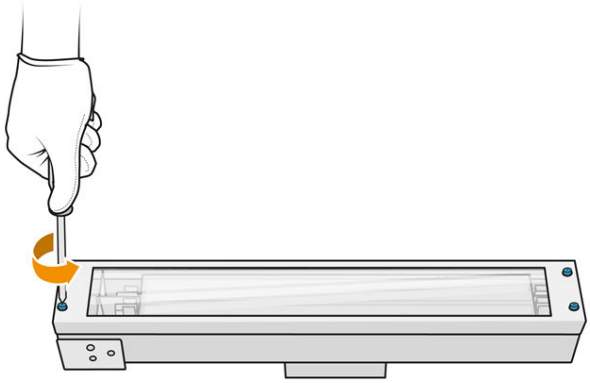

2. Carefully remove the frame of the exterior glass.

⚠ CAUTION: When you remove the frame, the glass may stick to it. Take care that the glass does not fall out of the frame as you pick it up.

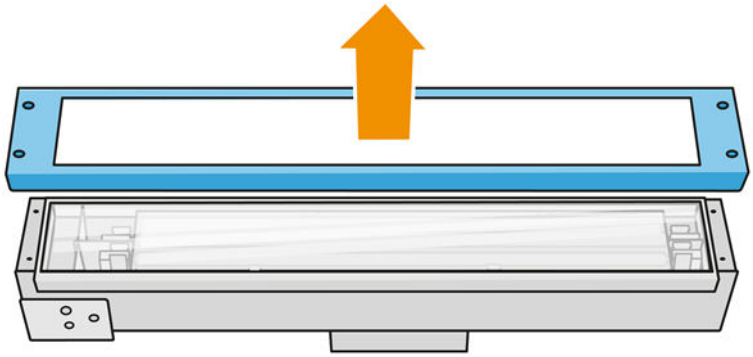

3. Remove the exterior glass and dispose of it according to local regulations.

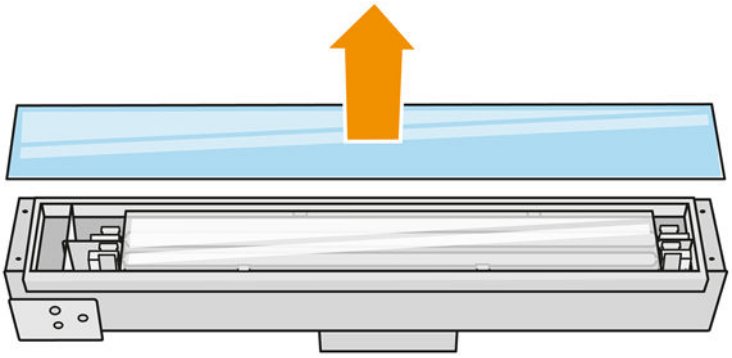

4. Insert the new glass into the frame.
5. Rescrew the exterior glass frame with glass into the module.

Reassemble the fusing-lamp module

▲ See Reassemble the fusing-lamp module on page 133.

Finish the replacement

1. Close the top cover.
2. Ensure that all windows, covers, and doors are closed and remain in their original positions.
3. Turn on the printer.
4. Calibrate the fusing lamps. See Calibrate the fusing lamps on page 175.

Replace a fusing-lamp internal glass

Prepare for replacement

1. Ensure that you have the fusing lamp glass kit.
2. Ensure that the printer is not printing.
3. If a job has just been printed, wait about 20 minutes for the printer to cool down.
4. You are recommended to wear gloves and mask.
5. Ensure that all windows, covers, and doors are closed and remain in their original positions.
6. Turn off the printer.

Risk of burns

Crush hazard

Risk of trapped fingers

Hazardous moving part

Light radiation hazard

Electric shock hazard

For more safety information, see Safety precautions on page 6

Remove the fusing-lamp module

▲ See Remove the fusing-lamp module on page 128.

Safety precautions for the fusing-lamp emitter

- Disregard of the safety precautions or improper operation of the infrared emitter can lead to injuries and material damage.
- The IR heating device should be operated only by specialists or trained personnel.

  The operator of the system should compile specific instructions for personnel training.
- The safety and functional reliability of the IR heating device are guaranteed only if you are using original accessories and spare parts from HP.
- After an emitter break, a dangerous voltage may be exposed to contact by the heating spiral.
- The reflector side should not be cleaned.

Transport and handling of the fusing-lamp emitter

- Transport the IR emitter, in the packaging provided, to the place of installation.

  ⚠ CAUTION: If the IR emitter must be transported without its packaging, wear linen gloves. Fingerprints on the quartz tube will cause devitrification, which leads to radiation losses and mechanical failure.
- Always carry the emitter with both hands. Carry it so that the cross-section faces up, to avoid bending and breaking.
- Grip the emitter only by the glass tube, and not by the connection cable, pinches, or ceramics.
- Avoid any pressure on the flat base.

When installing IR emitters

- HP recommends that you wear protective goggles when installing or replacing emitters, to protect yourself from broken glass that you may come into contact with.
- Pulling the connection cable should not cause any tension to the flat base. Bending radius of connection cable: > 30 mm.
- The safety and functional reliability of the IR heating device are guaranteed only when using original accessories and spare parts from HP.
- After an emitter break, a dangerous voltage may be exposed to contact by the heating spiral.
- The reflector side should not be cleaned.

After installation, the quartz glasses of the IR emitter must be cleaned of any soiling or perspiration. See Clean the fusing-lamp glasses on page 127.

Replace the fusing lamp

Optionally, you can make this task easier by downloading and printing the glass removal tools. You can download the tool from http://www.hp.com/go/jetfusion3d4200/software.

1. Turn the assembly upside down and unscrew the four screws of the exterior glass frame.

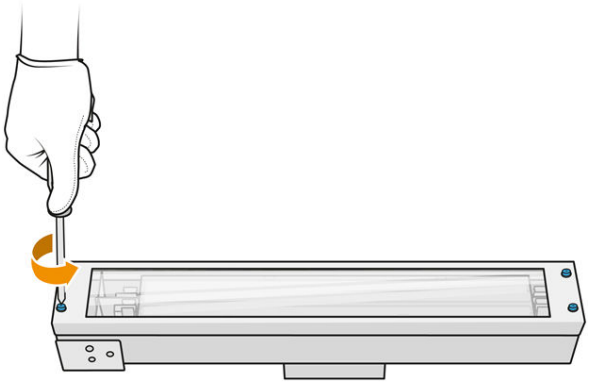

2. Carefully remove the frame of the exterior glass.

⚠ CAUTION: When you remove the frame, the glass may stick to it. Take care that the glass does not fall out of the frame as you pick it up.

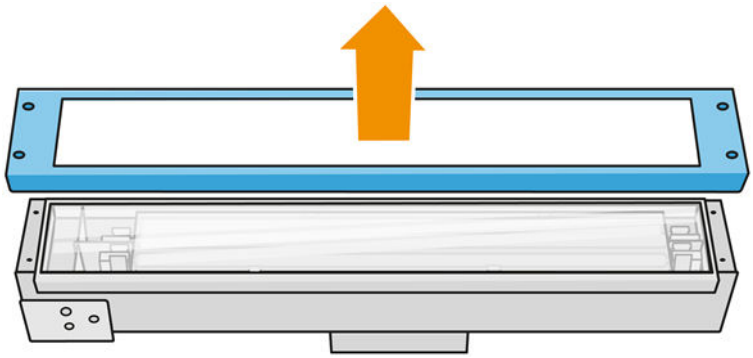

3. Remove the exterior glass.

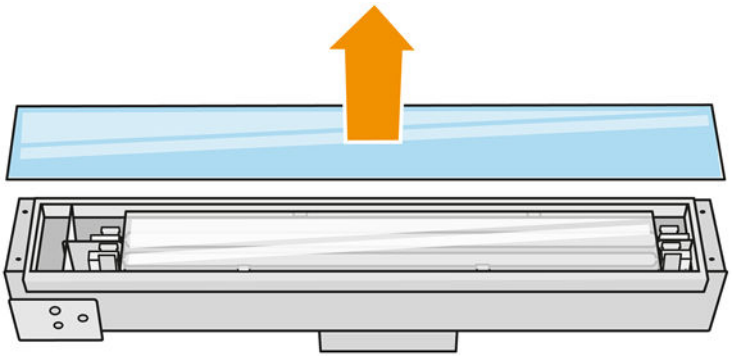

4. Push the internal glass to the side, deforming the metal clips, release the old internal glass, and dispose of it according to local regulations.

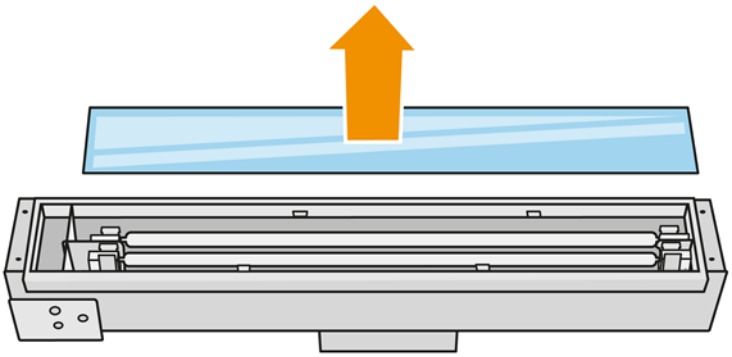

5. Insert the new internal glass, deforming the metal clips.
6. Add the frame with the outer glass, securing it with four screws.

Reassemble the fusing-lamp module

▲ See Reassemble the fusing-lamp module on page 133.

Finish the replacement

1. Clean the fusing-lamp glasses. See Clean the fusing-lamp glasses on page 127.
2. Close the top cover.
3. Ensure that all windows, covers, and doors are closed and remain in their original positions.
4. Turn on the printer.
5. Calibrate the fusing lamps. See Calibrate the fusing lamps on page 175.

Replace a heating lamp

At the printer's front panel, tap **Supplies** > **Heating lamps** to see the status of each lamp:

- **Missing**: The lamp is missing.
- **Replace**: The lamp has been identified as faulty. It should be replaced by a functional lamp.
- **Wrong**: The lamp type is not suitable for this printer.
- **Not in warranty**: The lamp is no longer covered by warranty.

Prepare for replacement

1. Ensure that you have the heating lamps kit, which is included in the printer initial maintenance kit, but can also be purchased separately.
2. Ensure that the printer is not printing.
3. If a job has just been printed, wait about 20 minutes for the printer to cool down.
4. You are recommended to wear goggles and cotton gloves.
5. If present, remove the build unit.
6. At the printer's front panel, tap **Supplies** > **Heating lamps** to see the status of each lamp. Any lamp identified as faulty should be replaced by a functional lamp: tap **Replace**. The lamps are numbered; remember the numbers of any lamps to be replaced.
7. Ensure that all windows, covers, and doors are closed and remain in their original positions.
8. Turn off the printer.

Risk of burns

Crush hazard

Risk of trapped fingers

Hazardous moving part

Light radiation hazard

Electric shock hazard

For more safety information, see Safety precautions on page 6

Remove a heating lamp

1. Open the top cover.

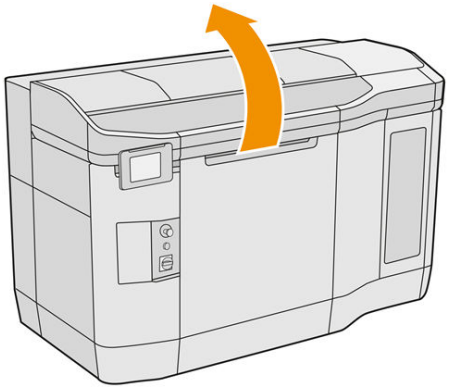

2. Unscrew four captive screws to remove the heating-lamp quartz glass.

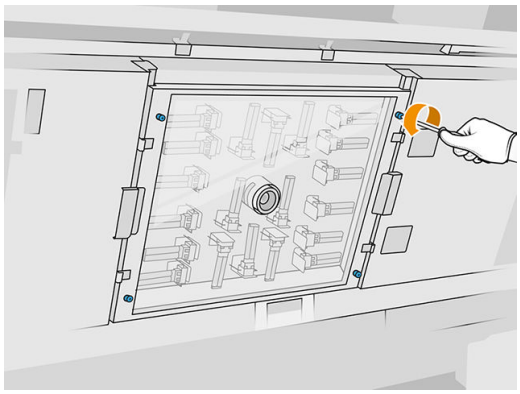

3. Pull the quartz glass out of the top cover and place it gently on a table.

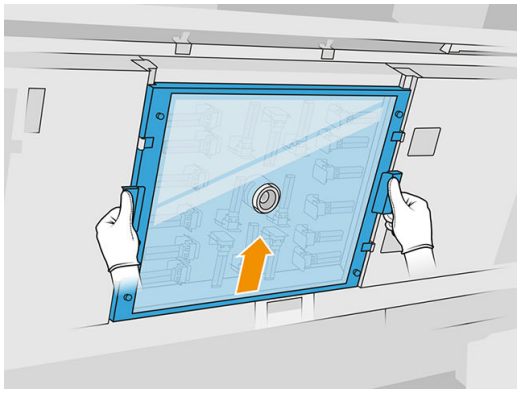

4. Identify which lamp you intend to replace.

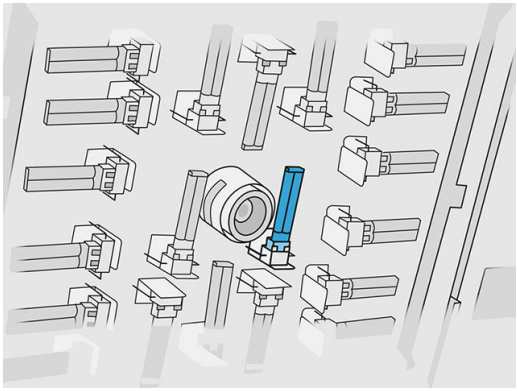

5. Remove the old lamp by sliding it out to disconnect it from its connector, then dispose of it according to local regulations.

⚠ CAUTION: It is important not to touch the lamps with your fingers. Always wear cotton gloves to handle the lamps.

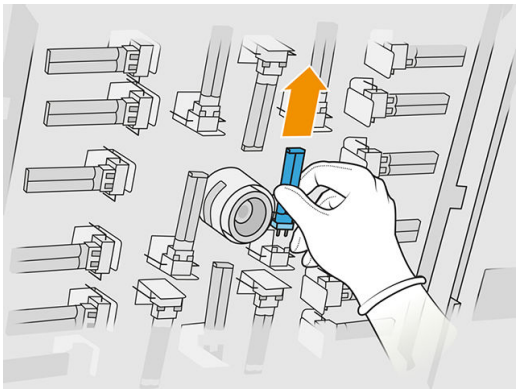

Safety precautions for the heating-lamp emitter

- Disregard of the safety precautions or improper operation of the infrared emitter can lead to injuries and material damage.
- The IR heating device should be operated only by specialists or trained personnel.

  The operator of the system should compile specific instructions for personnel training.
- The safety and functional reliability of the IR heating device are guaranteed only if you are using original accessories and spare parts from HP.
- After an emitter break, a dangerous voltage may be exposed to contact by the heating spiral.
- The reflector side should not be cleaned.

Transport and handling of the heating-lamp emitter

- Transport the IR emitter, in the packaging provided, to the place of installation.

⚠ CAUTION: If the IR emitter must be transported without its packaging, wear linen gloves. Fingerprints on the quartz tube will cause devitrification, which leads to radiation losses and mechanical failure.

- Always carry the emitter with great care, avoiding any impact or shaking. Carry it so that the cross-section faces up, to avoid bending and breaking.

- Grip the emitter only by the sides of the ceramic connector.
- Avoid any pressure on the flat base.

When installing IR emitters

- HP recommends that you wear protective goggles when installing or replacing emitters, to protect yourself from broken glass that you may come into contact with.
- The safety and functional reliability of the IR heating device are guaranteed only when using original accessories and spare parts from HP.
- After an emitter break, a dangerous voltage may be exposed to contact by the heating spiral.
- The reflector side should not be cleaned.

Insert a new heating lamp

1. Insert the new heating lamp in the correct position.
2. Put the quartz glass back in place and tighten the four captive screws.
3. Close the top cover.

Finish the replacement

1. Ensure that all windows, covers, and doors are closed and remain in their original positions.
2. At the front panel, tap , then **System tools** > **Replace parts** > **Heating lamps replacement**.
3. Next time you switch on the printer, you can check the heating lamp status in the front panel's Supplies app.

Replace an intermediate tank

Prepare for replacement

1. Ensure that the printer is not printing.
2. If a job has just been printed, wait about 20 minutes for the printer to cool down.
3. You are recommended to wear gloves.
4. Ensure that all windows, covers, and doors are closed and remain in their original positions.

Replace an intermediate tank

1. At the front panel, tap , then **System tools** > **Printer reset counter** > **Intermediate tank replacement**.
2. Remove two screws from the side cover, then remove the cover.

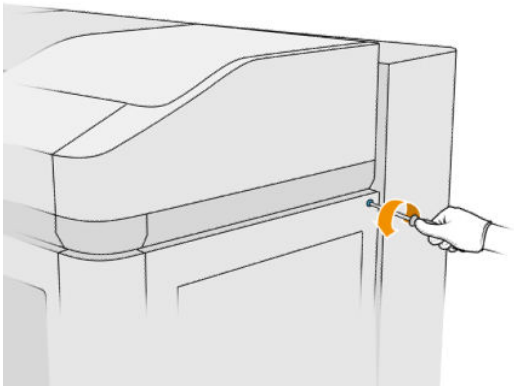

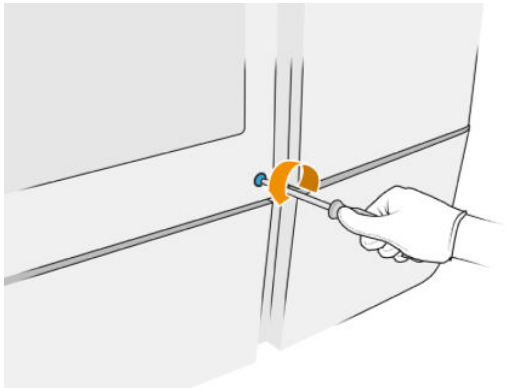

3. Follow strictly the instructions on the front panel. First you will need to remove the F1 or D1 tank and replace it by a new one. After a while, the front panel will tell you to do the same with the F2 or D2 tank. If necessary, repeat the process with the other pair.

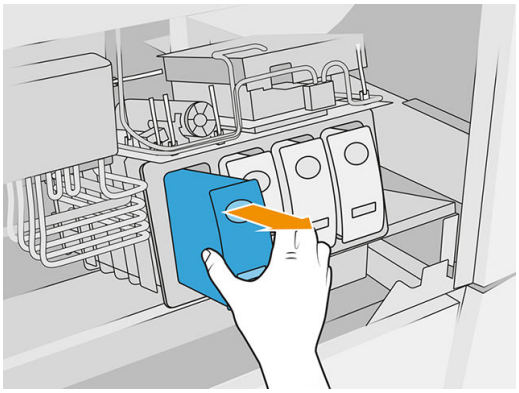

NOTE: Intermediate tanks must be changed in pairs (F1+F2 and D1+D2).

4. Identify the intermediate tanks you have just installed by attaching the appropriate stickers, which are provided.
5. Put back the side cover and the screws.
6. At the front panel, confirm that tanks have been replaced, so that the refilling process can start. This may take some time.

Replace the cleaning-roll collector

Prepare for replacement

1. Ensure that you have the printer user maintenance kit.
2. Ensure that the printer is not printing.
3. If a job has just been printed, wait about 20 minutes for the printer to cool down.
4. You are recommended to wear gloves and goggles.
5. Open the agent door and the external cleaning-roll door.

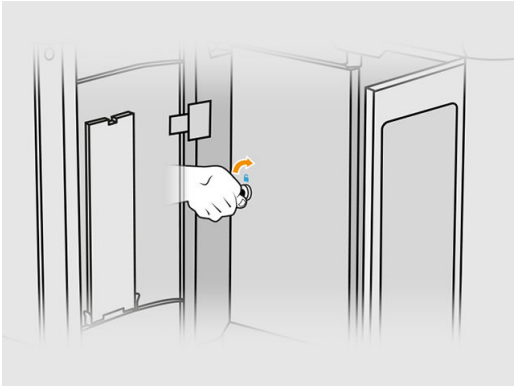

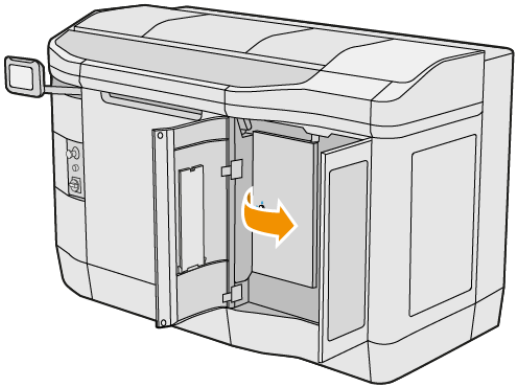

Replace the cleaning-roll collector

1. Locate the cleaning-roll collector, underneath the printhead cleaning roll.

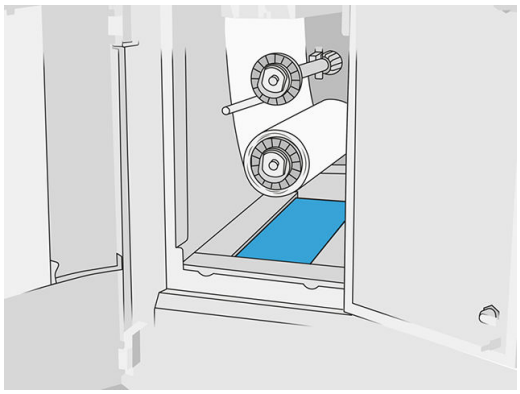

2. Pull out the old collector (foam).

TIP: Remember to wear gloves.

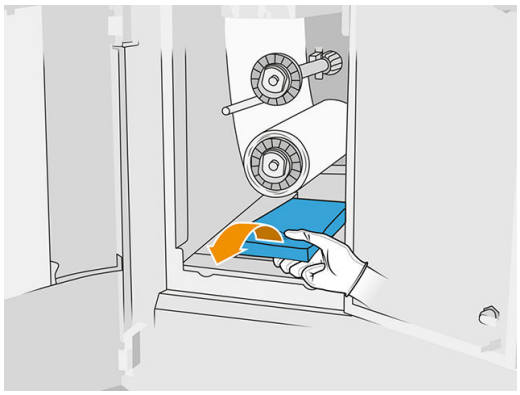

3. Slide in the new collector.

CAUTION: Proper maintenance and genuine HP consumables are required to ensure that the printer operates safely as designed. The use of non-HP consumables (supplies, filters, accessories) may present a risk of fire.

Finish the replacement

1. Close the printhead cleaning roll and agent doors.
2. Consult your local authorities to determine how to dispose of the old collector.

Replace the cleaning-roll free hub

1. Open the agent door and the cleaning-roll doors.

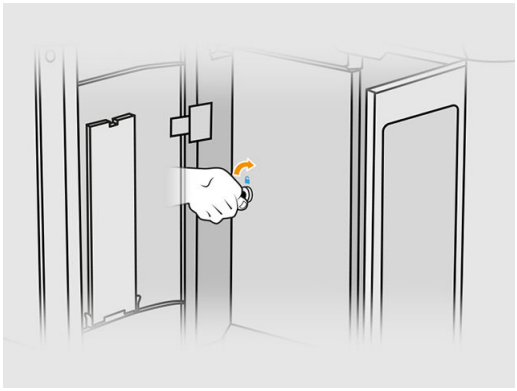

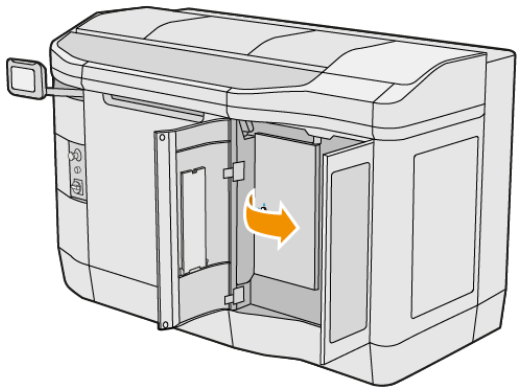

2. Remove the cleaning-roll free hub and replace it with the new one.

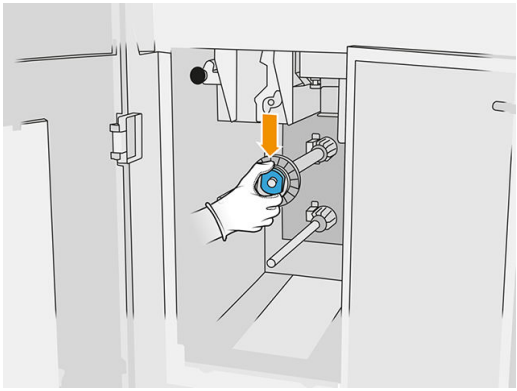

3. Close the cleaning-roll doors and the agent door.

Replace the cleaning-roll rubber hub

1. Open the agent door and the cleaning-roll doors.

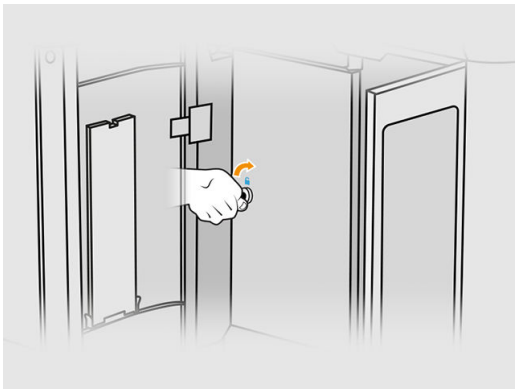

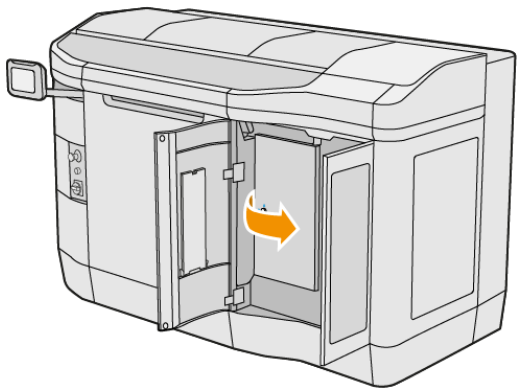

2. Remove the printhead cleaning roll. See Replace the printhead cleaning roll on page 46.

3. Remove the cleaning-roll rubber hub and replace it with the new one.

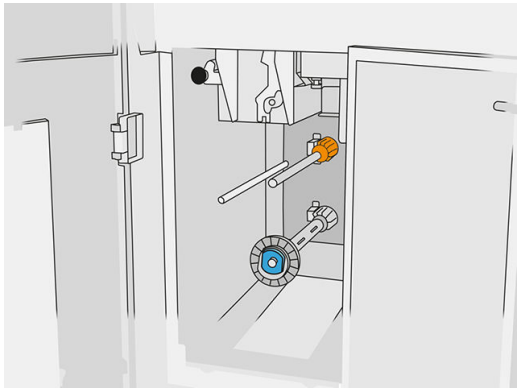

4. Close the cleaning-roll doors and the agent door.

Processing-station maintenance

Summary of maintenance operations

Frequency	Maintenance operation
Before loading	Clean the sieve on page 187
	Clean the loading nozzle sensor on page 188
After unpacking	Clean the working area on page 189
Once a week	Clean the exterior of the processing station on page 194
Once a year	Check the functionality of the Residual Current Circuit Breaker (RCCB) on page 195
	Check that the processing station is correctly earthed on page 195
Before using a different type of material	Purge the processing station on page 198
When requested	Replace the dust extractor filters on page 200
	Replace the vacuum-pump filter on page 202
	Replace the external tank on page 204
	Replace an e-cabinet fan filter on page 194

Maintenance operations

Clean the sieve

NOTE: Before some tasks, the front panel may ask you to clean the sieve. At that point, tap **Start** and proceed.

IMPORTANT: If you do not clean the sieve when requested, the loading time may be affected.

Prepare for cleaning

▲ Ensure that you have an explosion-protected vacuum cleaner with the following minimum specification:

- Air flow: 250 m³/h
- Depression: 19.6 kPa
- Power: 1800 W

Clean the sieve

1. Open the lid of the vacuum hose connection to the sieve.

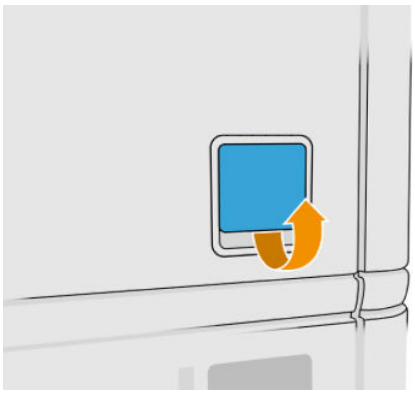

2. Connect an explosion-protected vacuum cleaner, and turn it on.

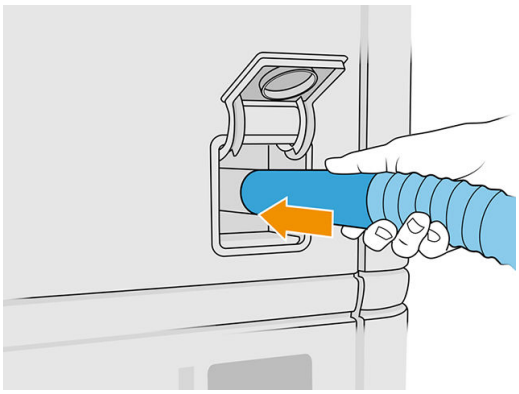

NOTE: If your vacuum hose is different in diameter from the processing station's connector, there are three files for adaptors (50, 60, and 65 mm) that you can find in http://www.hp.com/go/jetfusion3Dprocessingstation/support. To use them, first print them out, then remove two screws as indicated below, introduce the printed adaptor, and secure it with the removed screws.

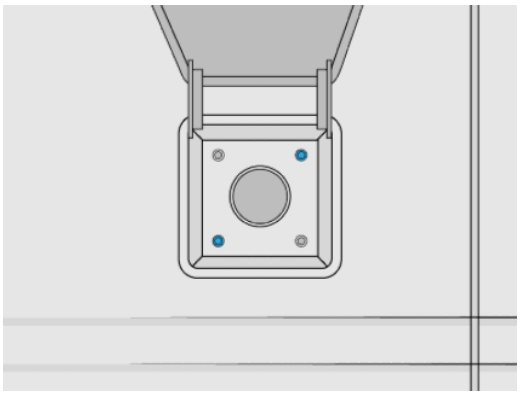

3. When finished, turn off the vacuum cleaner and unplug the hose.

Clean the loading nozzle sensor

Take the loading nozzle and use the hand air blower to blow air on the inner part.

IMPORTANT: Do not touch the sensor.

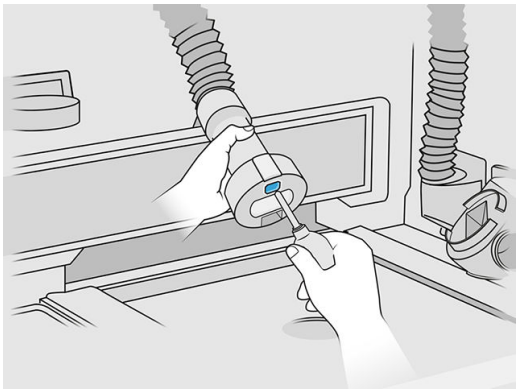

If you can see that the sensor is still dirty, or if you accidentally touched it with your hand, wipe the sensor glass clean by rubbing the surfaces lightly with a clean, soft, all-cotton cloth or cotton swab moistened with isopropyl alcohol. Then immediately wipe it dry with another clean, soft, all-cotton cloth or cotton swab.

NOTE: If you are in an area (such as California) that regulates VOC cleaning and maintenance fluids, instead of isopropyl alcohol use a VOC-certified cleaner such as a properly diluted Simple Green All-Purpose Cleaner.

Clean the working area

Prepare for cleaning

1. Ensure that you have an explosion-protected vacuum cleaner and an absorbent all-purpose cloth (these things are not provided by HP).
2. Remove the build unit.
3. You are recommended to wear gloves and goggles.

Clean the working area

1. Open the hood.
2. Remove the perforated metal sheet from the working area.

3. Clean the whole working surface, including under the perforated metal sheet, and the edges of the build unit using an explosion-protected vacuum cleaner.

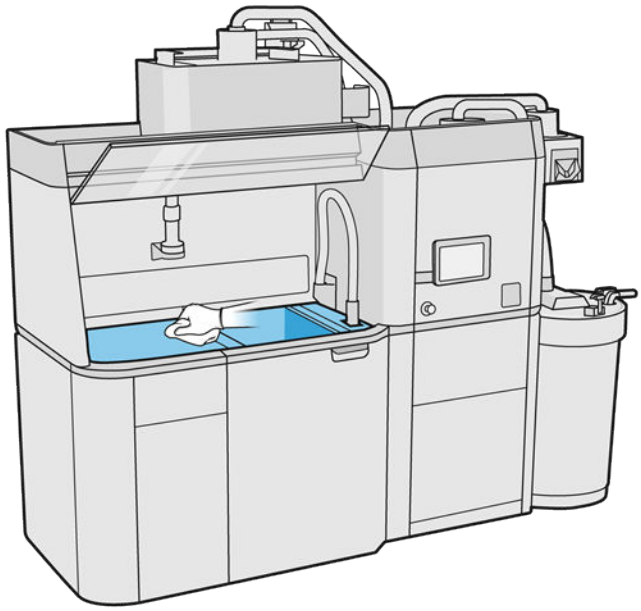

NOTE: Make sure the platform control button area is clean.

4. Clean the front and sides of the processing station using an absorbent all-purpose cloth.

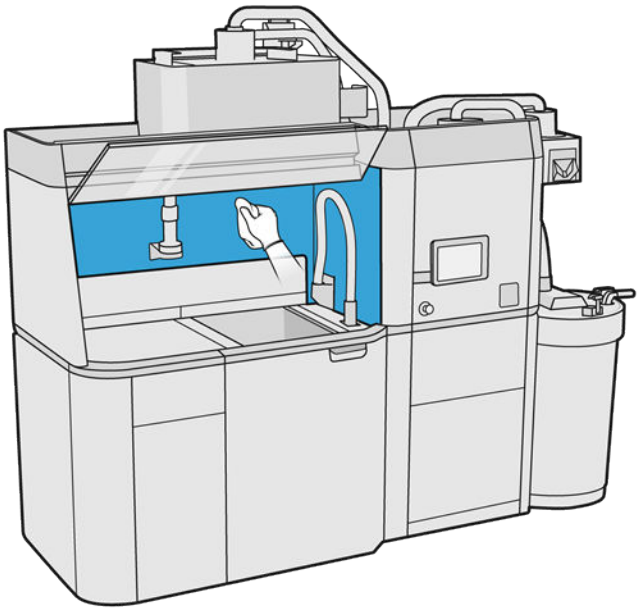

5. Clean the perforated metal sheet, away from the processing station, using an absorbent all-purpose cloth.

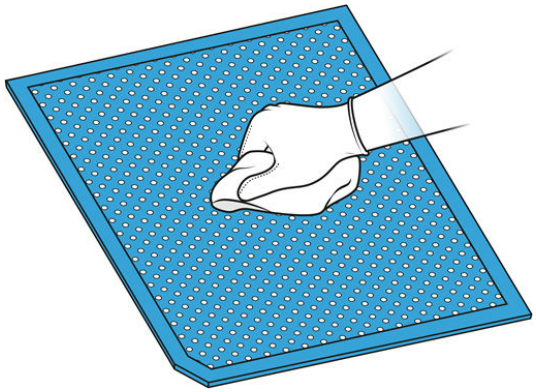

6. Clean the inner side of the hood using the same kind of cloth, then close the hood.

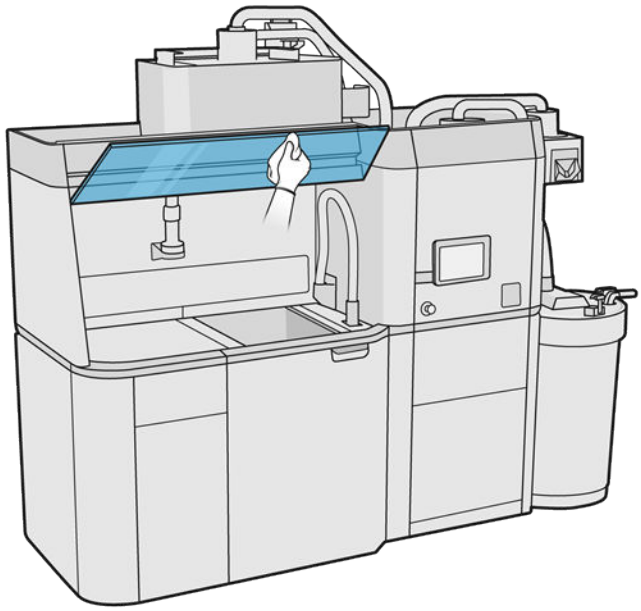

7. Clean the outside of the hood using the same kind of cloth.

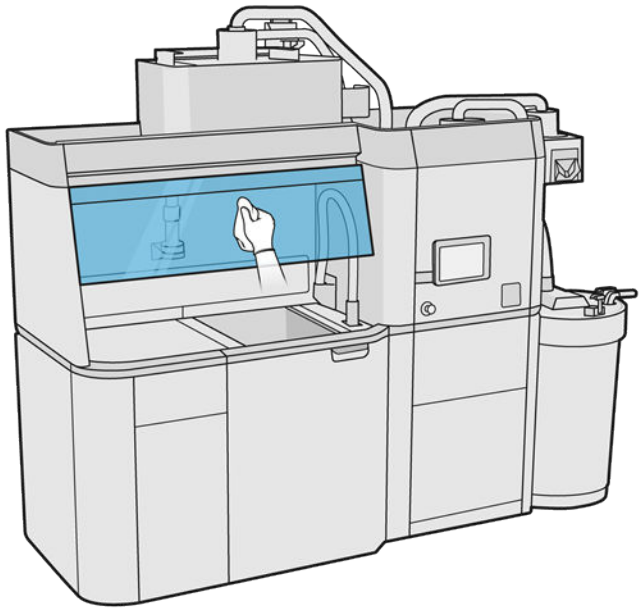

8. Put back the perforated metal sheet.

Clean the build-unit housing

1. Open the build-unit door.
2. Vacuum the build-unit housing and its internal parts including the build-unit connector to ensure that there is no material around or inside the connector. Do the same with side of the build unit near the connector as well.

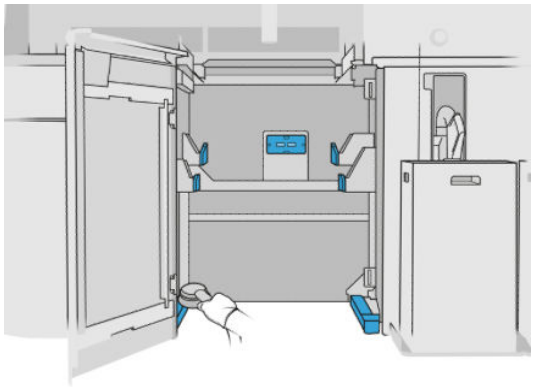

Clean the exterior of the processing station

1. Check the whole processing station for dust, material, or aerosol on covers, doors, and so on.
2. If necessary, clean the processing station further using a vacuum cleaner with a soft brush nozzle.
3. Additionally, you can wipe it with a dry cloth.

Replace an e-cabinet fan filter

Prepare for replacement

1. Locate the replacement filters provided in the Processing-station maintenance kit.
2. You are recommended to wear gloves, mask, and safety goggles.
3. Ensure that all windows, covers, and doors are closed and remain in their original positions.
4. Turn off the processing station.

Replace an e-cabinet filter

1. Locate the four e-cabinet filters.

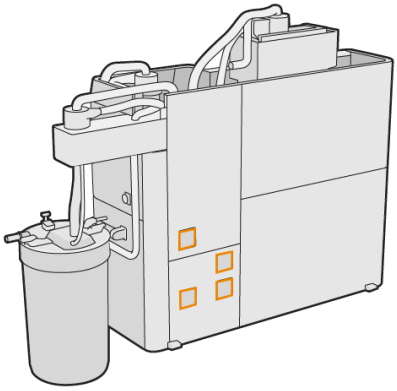

2. Remove the plastic filter cover.

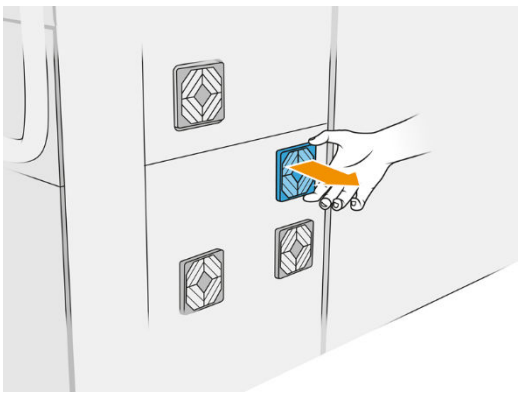

3. Remove and dispose of the old filter according to local regulations, and insert the new one.

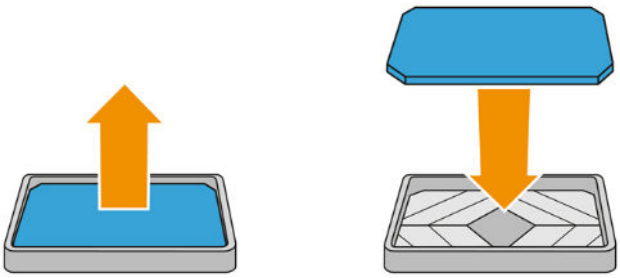

4. Carefully put back the filter cover.

Finish replacement

1. Ensure that all windows, covers, and doors are closed and remain in their original positions.
2. Turn on the processing station.

Safety maintenance of the processing station

Check the functionality of the Residual Current Circuit Breaker (RCCB)

Following standard RCCB recommendations, it is recommended that the RCCB is tested on a yearly basis. The procedure is as follows:

1. Turn off the processing station from the front panel, not using the service switch.
2. Test that the RCCB works correctly by pressing the test button.
   - If the RCCB does not trip when the test button is pressed, this indicates that it has failed. The RCCB must be replaced for safety reasons; call your service representative to remove and replace the RCCB.
   - If the RCCB trips, this indicates it is working correctly; reset the RCCB to its normal on state.

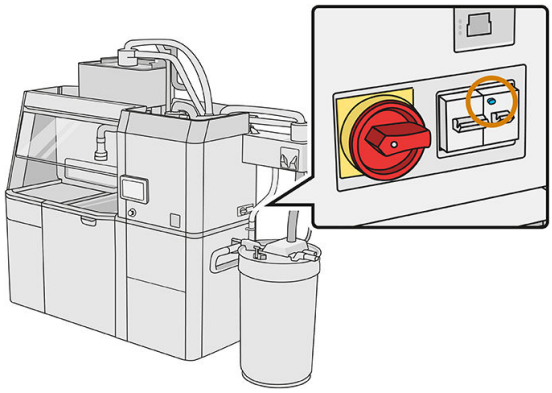

Check that the processing station is correctly earthed

Check that the resistance between any metal part of the processing station's internal chamber and the building's earth is less than 1 Ω.

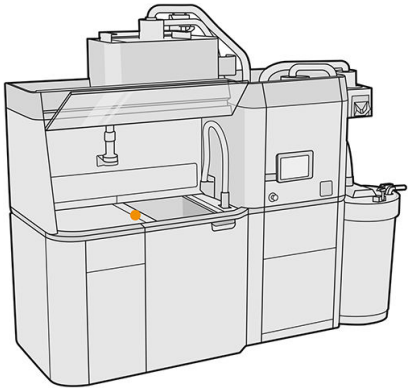

Clean the processing station

You may sometimes decide to clean the processing station without purging it, in order to remove the material inside it.

NOTE: After cleaning, some residual material may still remain in the processing station. You can remove more of the material by purging.

CAUTION: It is important to keep the purge tool in the indicated position during the whole process. In case of system error, do not disconnect the hoses; restart the processing station and restart the process, or start an unpacking process to ensure that the material left in the hoses is properly cleaned. If it is not possible to do either of these things, remove the tool from its position, keeping it horizontal to avoid possible material spillages.

Clean the processing station

1. You are recommended to replace the external tank with a new one. Otherwise, the process may be interrupted when the tank is full.
2. At the front panel, tap , then **Material management** > **Clean the processing station**.
3. Ensure that the external tank is closed.
4. Place the sieve connector on the reusable material collector and connect it to the sieve.

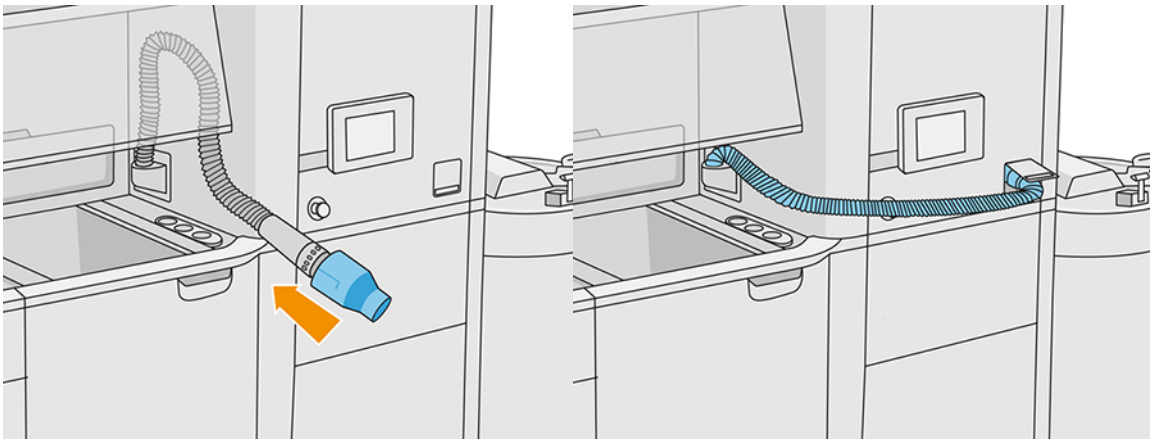

5. Disconnect the material cartridge connectors and attach the cartridge caps to them.

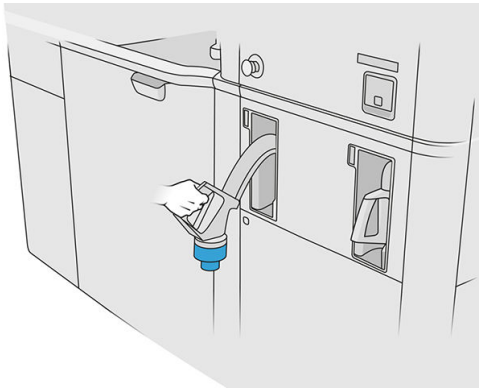

6. Stick each cartridge connector to the outside of the processing station (each connector contains a magnet).
7. Tap **Continue** on the front panel. When the processing station notifies you that it has finished, disconnect the material collector from the sieve and remove the collector.
8. Take the purge tool from the drawer and place it on the side of the working area.

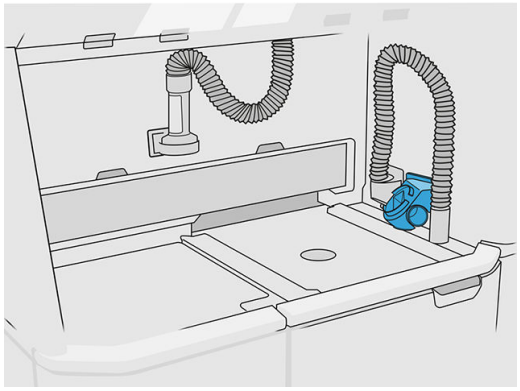

9. Connect the material loading nozzle to the reusable material collector with the purge tool.

⚠ CAUTION: Ensure that the hoses are connected properly. The loading nozzle should be connected to the top and the material collector to the side.

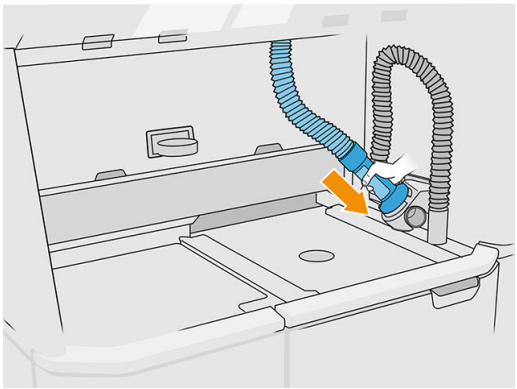

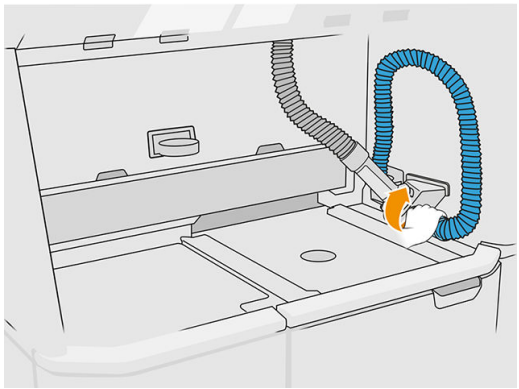

10. Tap **Continue** on the front panel.

IMPORTANT: Do not disconnect the tubes until the cleaning process has finished.

11. Remove the purge tools and place the material collector and material loading nozzle in the parking position. Tap **Continue** on the front panel.

12. Clean the sieve. See Clean the sieve on page 187.

Purge the processing station

The processing station should be cleaned and purged before changing to a different type of material.

IMPORTANT: The processing station should always be cleaned before purging. See Clean the processing station on page 196.

IMPORTANT: The purge process may take longer than displayed on the front panel, but do not switch off the system. If the system is switched off in the middle of the process, the process will need to be started again (cleaning included), and more fresh material will be needed.

CAUTION: It is important to keep the purge tool in the indicated position during the whole process. In case of system error, do not disconnect the hoses; restart the processing station and restart the process, or start an unpacking process to ensure that the material left in the hoses is properly cleaned. If it is not possible to do either of these things, remove the tool from its position, keeping it horizontal to avoid possible material spillages.

1. At the front panel, tap , then **Material management** > **Change material**.

2. Replace the external tank by a new one, which will be used for waste material.

3. Put in place the new material cartridges containing the material that you want to use.

4. Take the purge tool from the drawer and place it on the side of the working area.

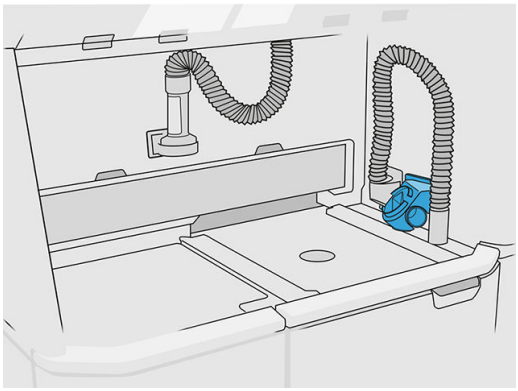

5. Connect the material loading nozzle to the reusable material collector with the purge tool.

CAUTION: Ensure that the hoses are connected properly. The loading nozzle should be connected to the top and the material collector to the side.

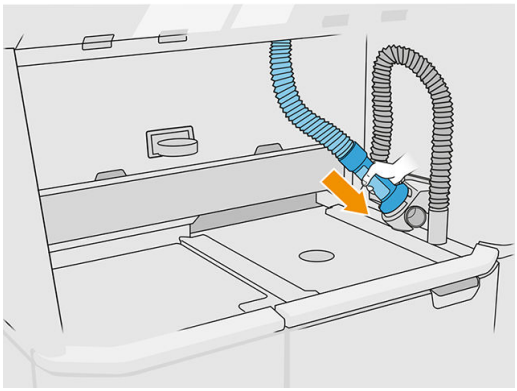

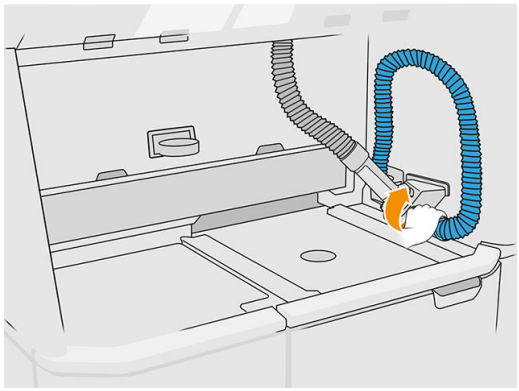

6. Tap **Continue**.
7. Unlatch and open the external tank lid.

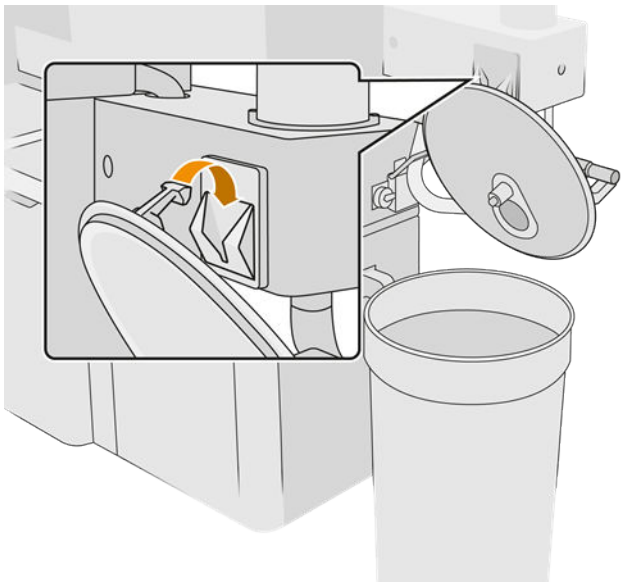

8. Connect the external tank collector and pipe. You are recommended to wear gloves and goggles.

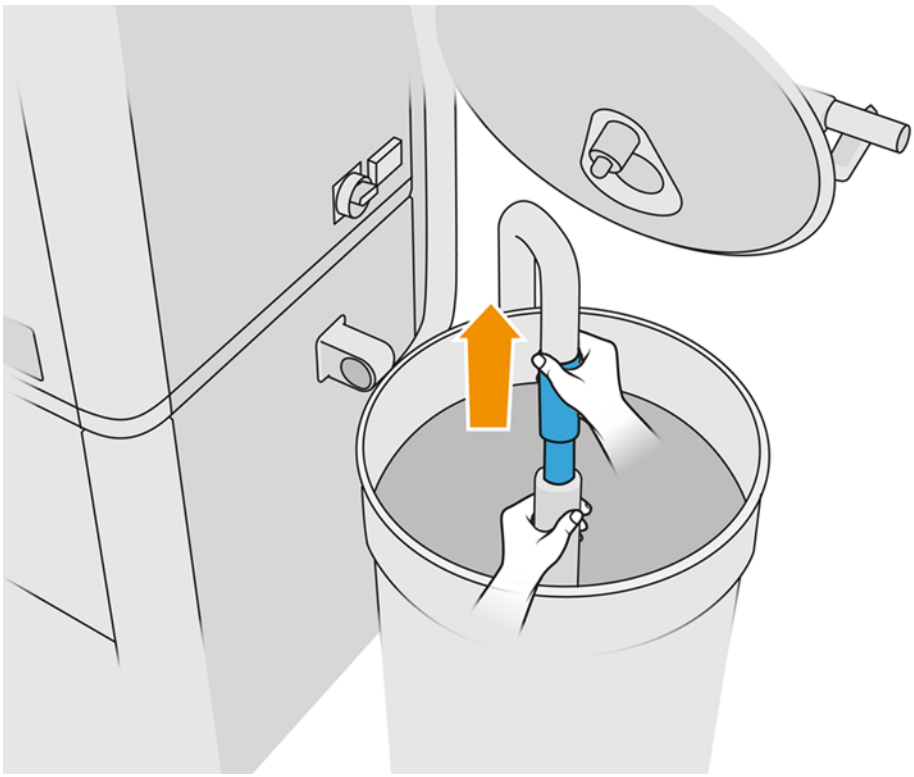

NOTE: The pipe sucks up material in its immediate vicinity. If you leave it in one position, it will consume all the material in that area, while there is still material elsewhere in the tank. You should therefore move the pipe around in the tank to access all the available material.

NOTE: You can insert the pipe with the vacuum switched off, if you like.

9. Start the process from the front panel to extract the material from the external tank.
10. Confirm that all the material has been removed from the external tank.
11. Tap **Continue**.
12. Disconnect the material cartridge connectors, attach the cartridge caps to them, and tap **Continue** on the front panel.
13. Tap **Finish**.
14. Dispose of the material from the external tank according to local laws.
15. Clean the external tank with an explosion-protected vacuum cleaner.
16. Connect the material cartridges that you intend to use.

NOTE: After purging the processing station, you must configure the material to be used. **Material management** > **Change material**.

Replace the dust extractor filters

1. Start the replacement from the front panel, when requested.
2. Clean the door with an explosion-protected vacuum cleaner.
3. HP recommends cleaning the filters through the door grid, to avoid splashing the material when extracting the filters.

4. Ensure that the build unit is inserted.
5. Do not touch the filter papers, and always follow the instructions from the manufacturer.
6. Remove the cover locking screws by hand, and open the cover to access the filters.

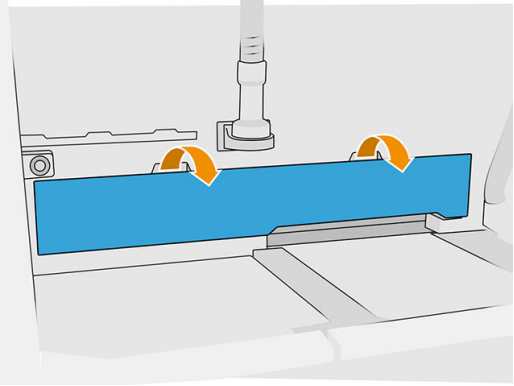

7. Pull the right-hand filter out of its enclosure.

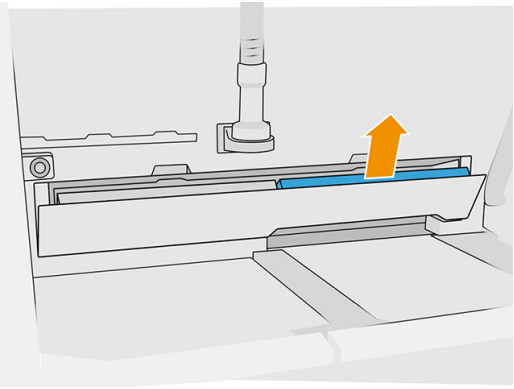

8. Pull the left-hand filter out of its enclosure.

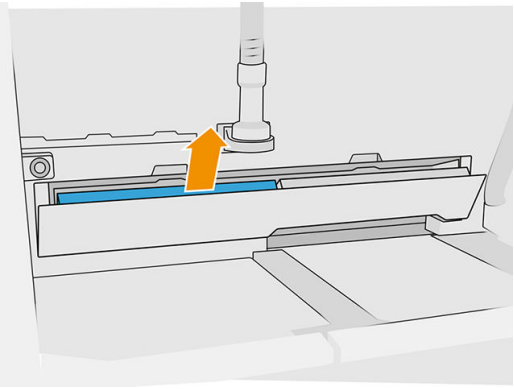

9. Dispose of the old filters according to local regulations.
10. Vacuum the area with an explosion-protected vacuum cleaner.

11. Insert the two new filters. Take care to insert the filter correctly: the arrow on the side of the filter should point towards the interior of the processing station.

12. Close the cover, pushing it back. At the same time, tighten the door locking screws by hand. Make sure they are completely tightened.

Replace the vacuum-pump filter

Prepare for replacement

1. Locate the new vacuum-pump filters, which are provided in the Processing-station maintenance kit.
2. Ensure that the processing station is not in use.
3. You are recommended to wear goggles, gloves, and mask.

Replace the vacuum-pump filter

1. Start the replacement from the front panel, when requested.
2. If material cartridges are placed on the front of the processing station, remove them.
3. Clean the handle parking area and the top surface of the material cartridges with an explosion-protected vacuum cleaner.

NOTE: Material may leak from the handles.

4. Open the cover.

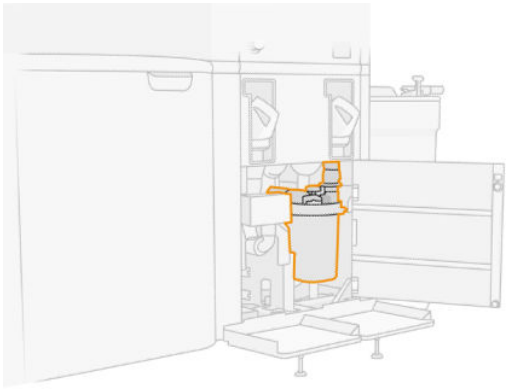

5. Completely unscrew the knob to release the filter.

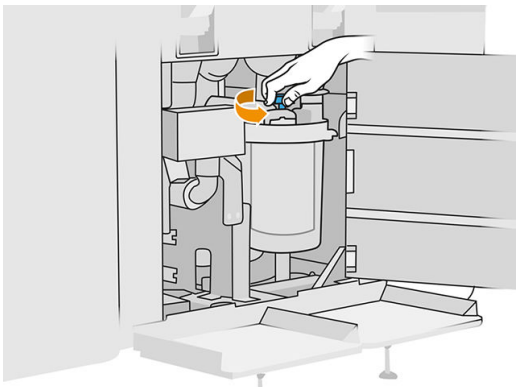

6. Rotate the container clockwise to release it.

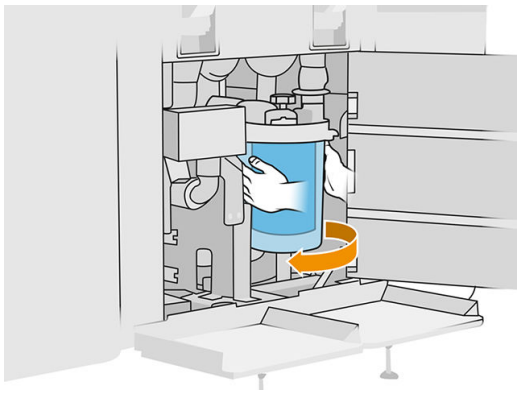

7. Remove the filter and dispose of it according to local regulations.

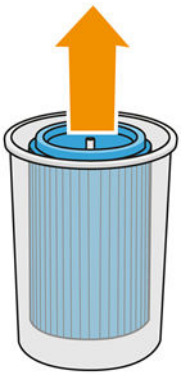

8. Clean the inside of the container with an explosion-protected vacuum cleaner.

9. Insert the new filter between the container and the central tube, with the closed end at the top and the open end at the bottom.

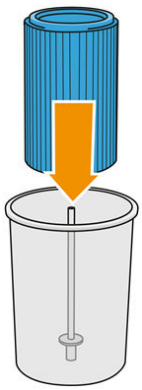

10. Rotate the container anti-clockwise.

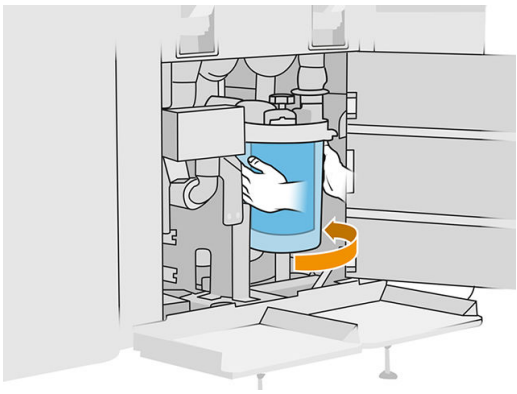

11. **IMPORTANT:** Tighten the knob to lock the container and filter.

Finish the replacement

1. Clean the sieve lid and bottom area cover with an explosion-protected vacuum cleaner.

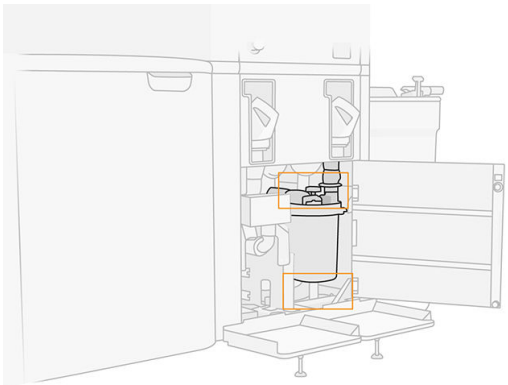

2. Close the cover.
3. Place and connect the material cartridges.

Replace the external tank

1. Start the replacement from the front panel by tapping , then **Other supplies** > **Replace** (on the external tank card).

2. Open the two latches that lock the lid.

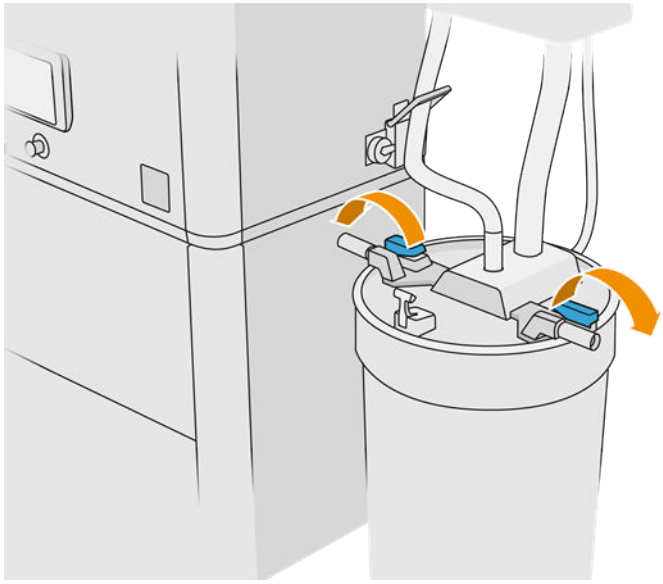

3. Open the lid by pulling it up, and hang it on the structure.

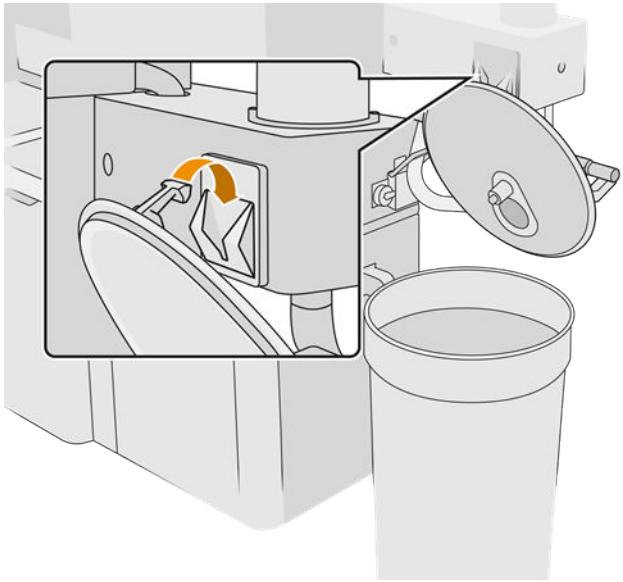

4. Get the storage lid that came with the external tank when purchased and use it to close the tank.

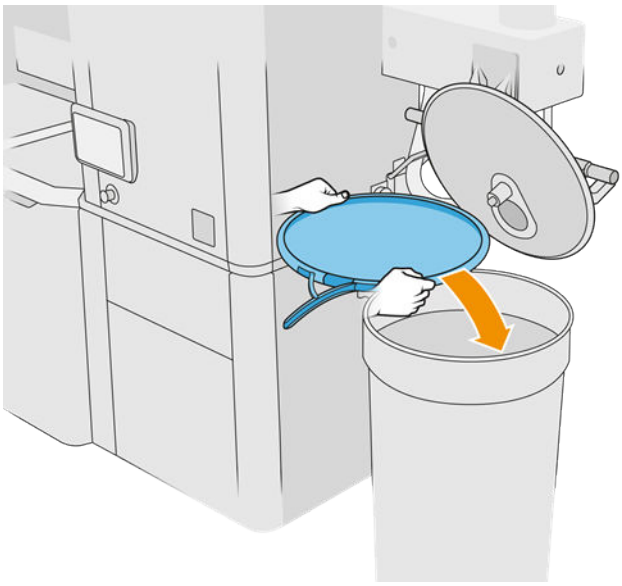

5. Latch the lid.

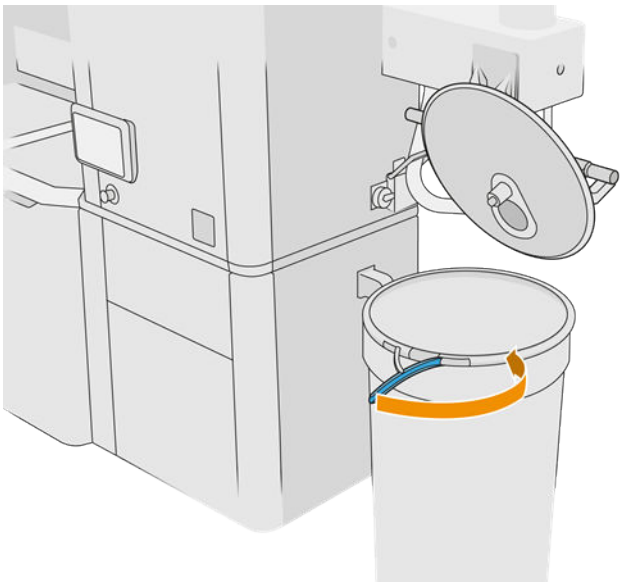

6. Use a lift trolley to remove the tank to a storage area.

IMPORTANT: The tank should be stored in the same environmental conditions as specified for the processing station, otherwise the material may become unusable. The simplest solution is to keep it in the same room as the processing station, well away from sources of heat or cold. Depending on the material, it may be sensitive to temperature, humidity, or other factors.

7. Clean the inner side of the lid using an explosion-protected vacuum cleaner.

8. Use a lift trolley to bring the tank that you intend to use.

IMPORTANT: Use a trolley only to move the external tank. When the processing station is working, the external tank should be on the floor, at the same level as the processing station.

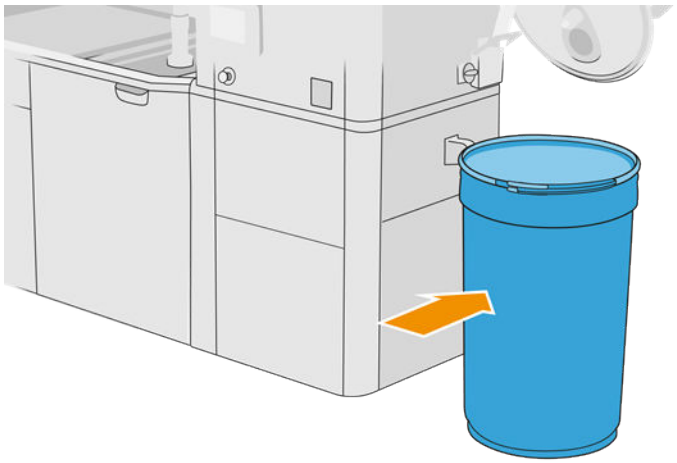

9. Unlatch and remove the storage lid.

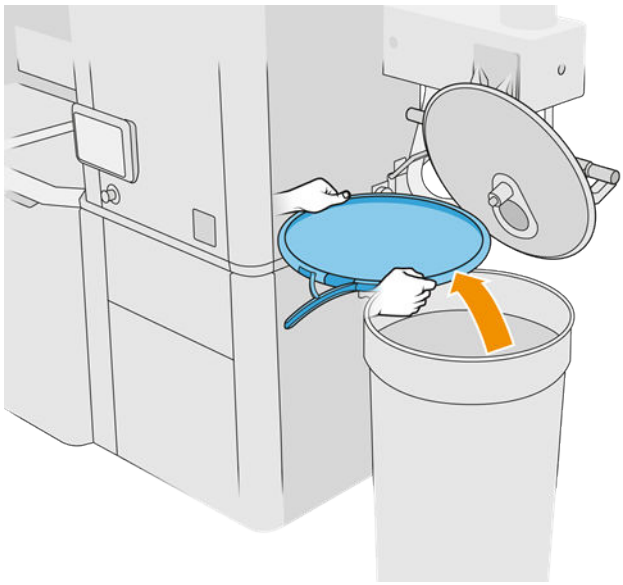

10. Close the lid and lock it with the latches.

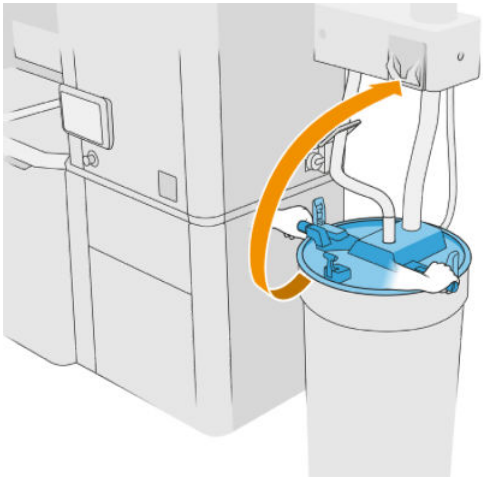

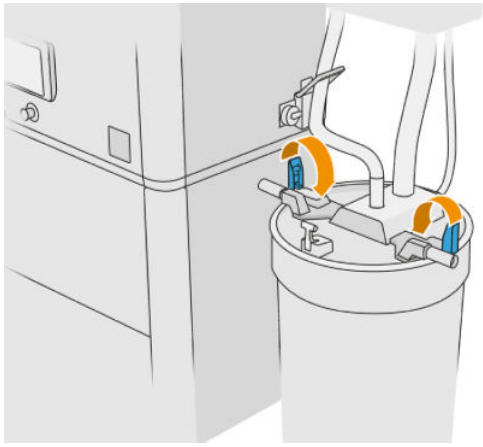

11. The front panel displays the status as ready.

⚠ CAUTION: Use HP-certified external tanks only. The use of third-party external tanks can cause safety risks, material leakages, and malfunctions in the processing station; and may affect your system warranty.

Build-unit maintenance

Summary of maintenance operations

Frequency	Maintenance operation
Once per build, after unpacking	Clean the surface of the build unit on page 208
Once a week	Clean the exterior of the build unit on page 213
Once a month	Vane transmission maintenance on page 214
Once a year	Replace the build-unit material-chamber filters on page 221
Before changing the mix ratio	Clean the surface of the build unit on page 208
Before using a different type of material	Clean the build unit on page 213

Maintenance operations

Clean the surface of the build unit

Prepare for cleaning

1. Ensure that you have a lint-free cloth (not provided by HP).
2. Ensure that you have unpacked any build.
3. Ensure that the platform is in the highest position and the build unit is empty.
4. Ensure that the build unit is inside the processing station.
5. You are recommended to wear gloves.

Clean the build unit

1. Vacuum the build-unit printing platform with the reusable material collector.

2. Vacuum the front overflow tray.

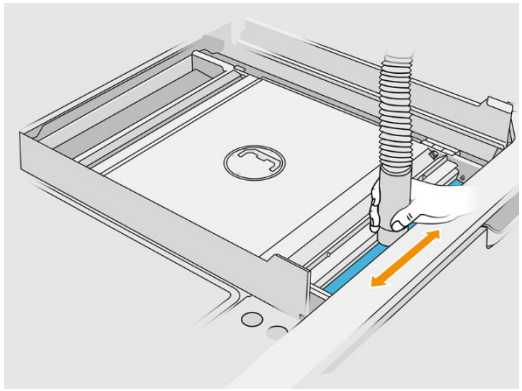

3. Open the flaps on both sides.

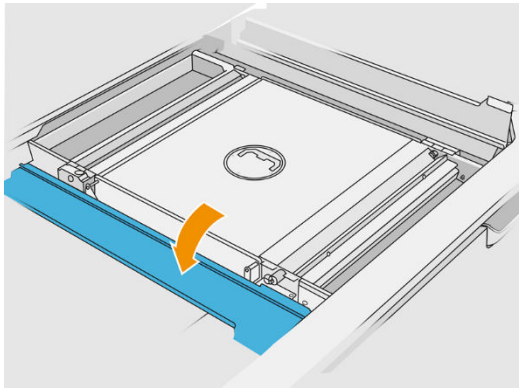

4. Remove the front and rear vane feeders by pressing each feeder against the wall and moving it aside.

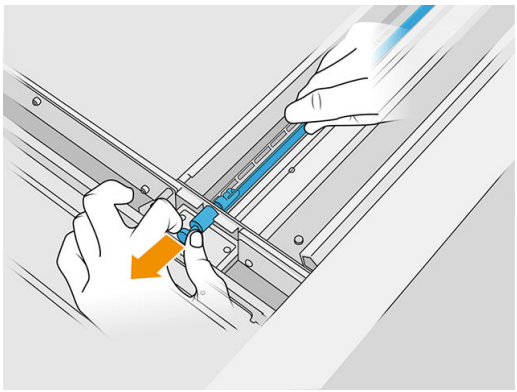

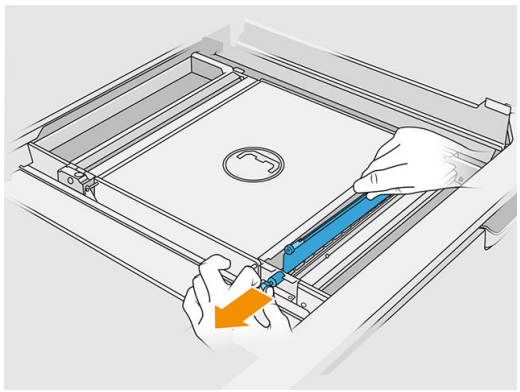

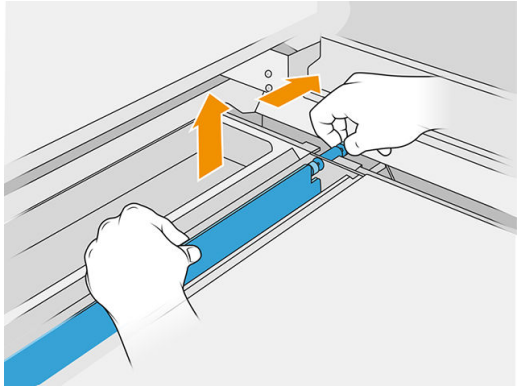

5. Use the reusable material collector to vacuum the vane feeders that you removed.
6. Attach the crevice nozzle to the reusable material collector.

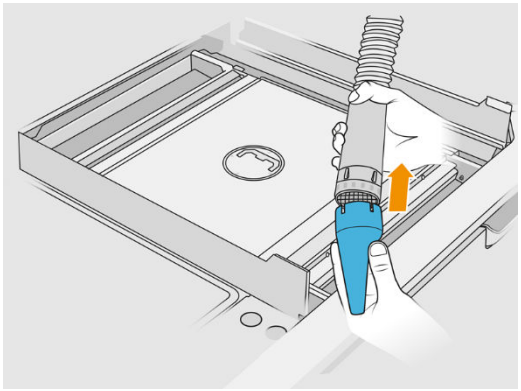

7. Vacuum the front and rear feed trays. Pay special attention to the corners of the trays and underneath the mesh shaker.

IMPORTANT: Do not use the wide nozzle for this operation.

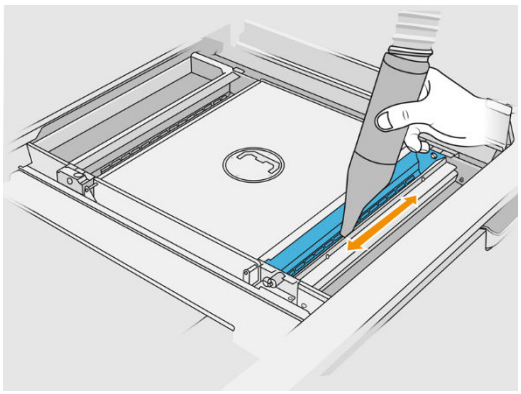

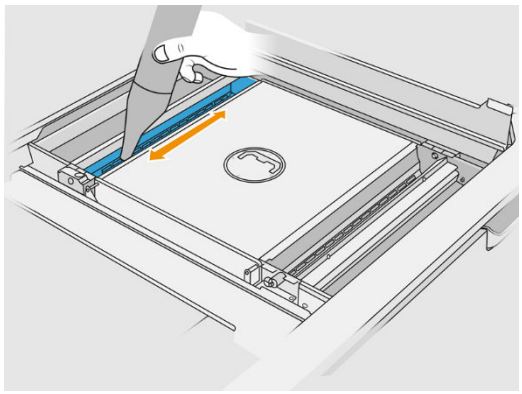

8. Clean the feed tray cavities with a cloth, making sure that no solidified material is left.

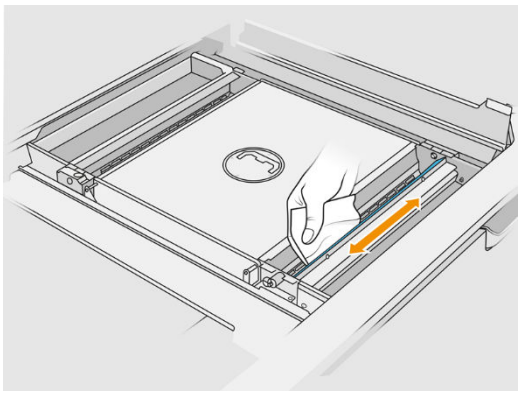

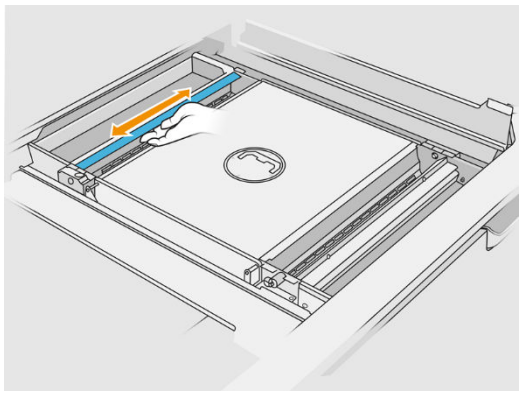

Try to remove as much material as possible. The result should be at least as clean as shown below:

9. Clean the recoating unit wiper at the rear.

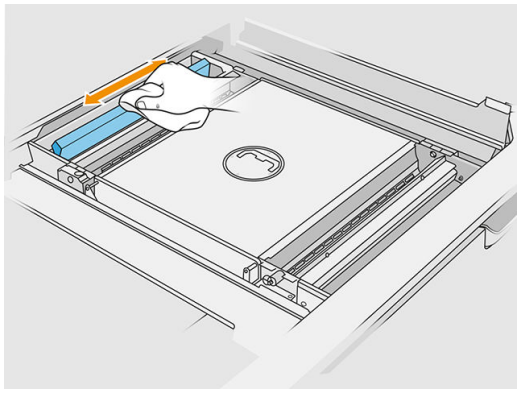

10. Clean the front and rear vane feeders with a cloth. Also use a scourer if necessary to remove all material.

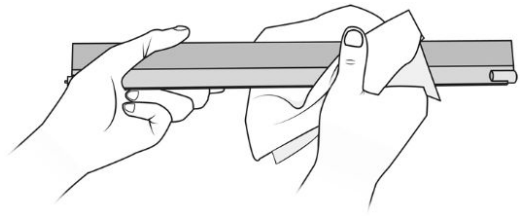

11. Vacuum the feed trays again, making sure there is no material left.
12. Vacuum the overflow trays.

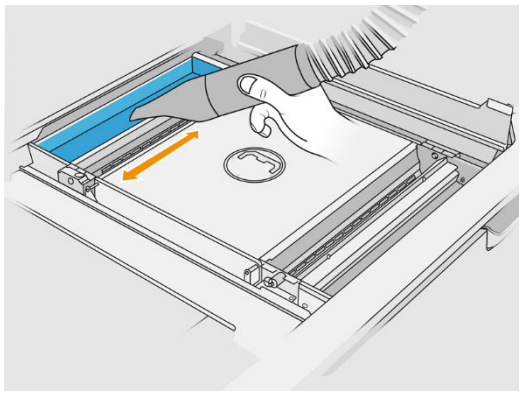

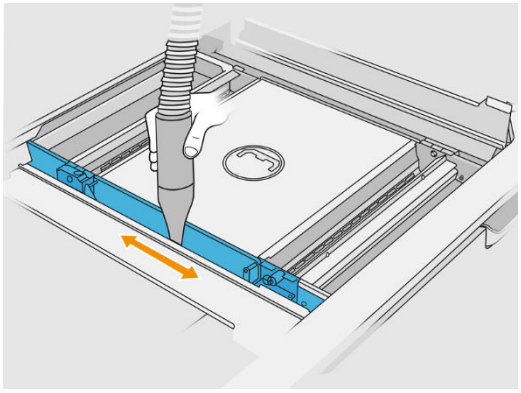

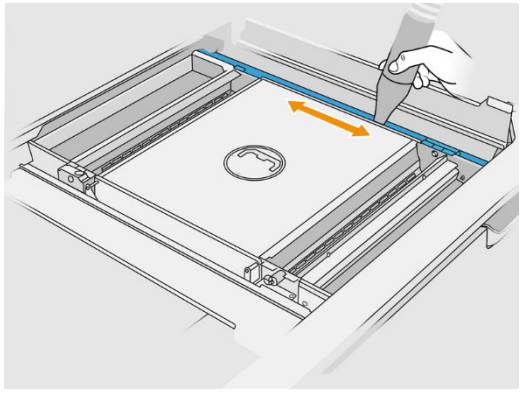

13. Attach the wide nozzle to the reusable material collector.
14. Vacuum the build unit platform.

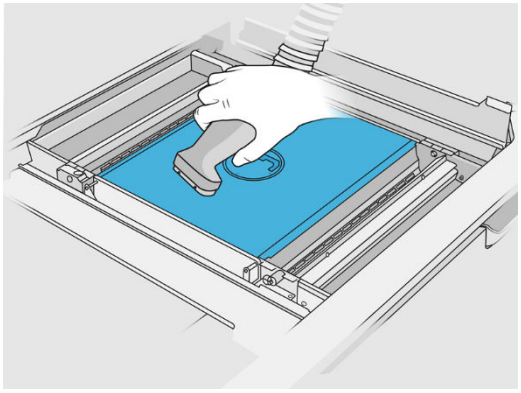

Finish cleaning

1. Put the vane feeders back into their original positions.

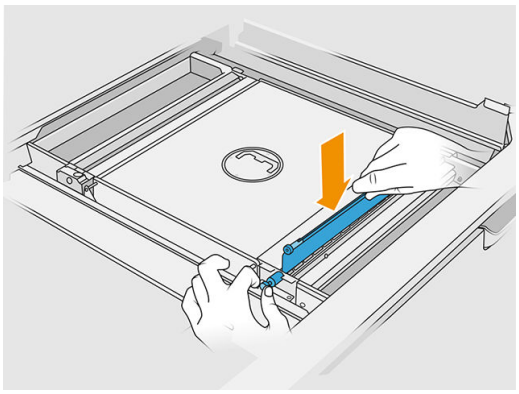

2. Close the flaps.

3. Attach the unpacking nozzle to the reusable material collector and leave it in the parking slot.

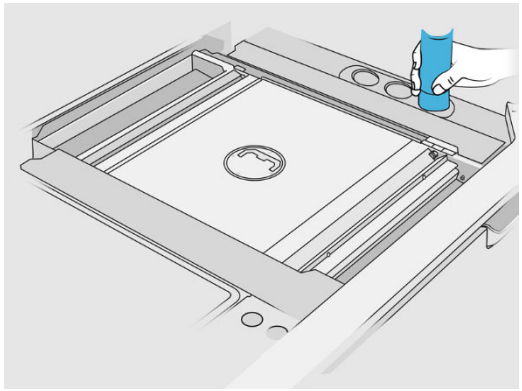

4. The processing station checks that the vane feeders are working correctly.

Clean the exterior of the build unit

Prepare for cleaning

1. Ensure that you have an explosion-protected vacuum cleaner, an absorbent all-purpose cloth, and deionized water (these things are not provided by HP).
2. You are recommended to wear gloves, mask, and goggles.
3. Remove the build unit from the processing station.

Clean the exterior of the build unit

1. Clean all top surfaces with a cloth dampened with deionized water.
2. Clean dust or material from the external surfaces and parts of the build unit: covers, handle, and structure. You can use an explosion-protected vacuum cleaner with a soft brush nozzle.
3. Alternatively, you can wipe it with a dry cloth.

Clean the build unit

1. Clean the surface of the build unit, if you have not already done so. See Clean the surface of the build unit on page 208.
2. At the front panel, tap **Build unit** > **Clean**.
3. Remove the caps from the cleaning connectors.

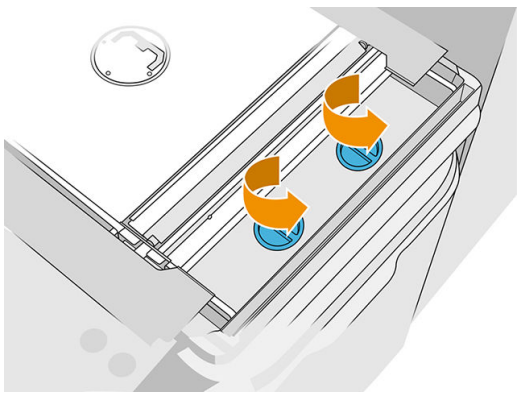

4. Insert the reusable material collector into the right-hand cleaning connector of the front overflow tray, and tap **Start** on the front panel.

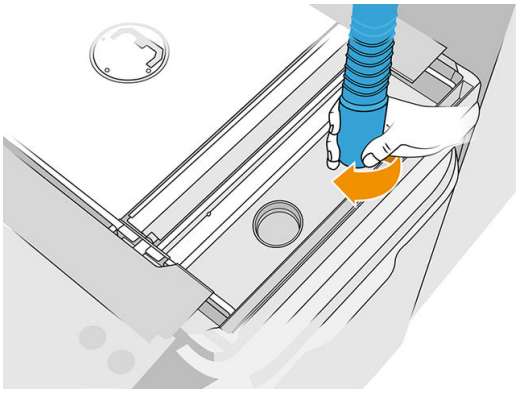

5. When prompted by the front panel, change the material collector to the left-hand connector.
6. When prompted by the front panel, change the material collector back to the right-hand connector.
7. Tap **Start** on the front panel and wait until the process has finished.
8. Vacuum the overflow tray.
9. Put the caps back onto the cleaning connectors.

Vane transmission maintenance

Vane transmissions in the build unit tend to get blocked due to a black mixture of grease, powder and metal particles from the gears. When this happens, the vane sensing will be affected, causing "vane full" or "not enough powder" System Errors, or even vane shutdowns in the most extreme cases. Affected transmissions will be difficult to move by hand too.

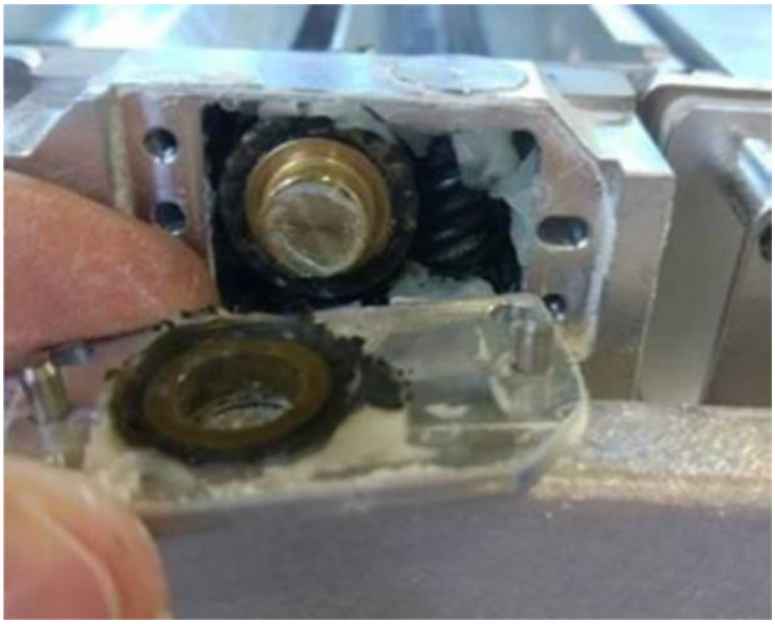

To prevent this blocking mixture from appearing and increase the life of the gears as well, we highly recommend following the below process to clean and grease the vane transmissions every 100,000 layers.

Also, we have identified that some build units can accumulate powder in the bottom sump and around the platform transmission area, so every 100,000 layers a cleaning of the bottom sump will be required.

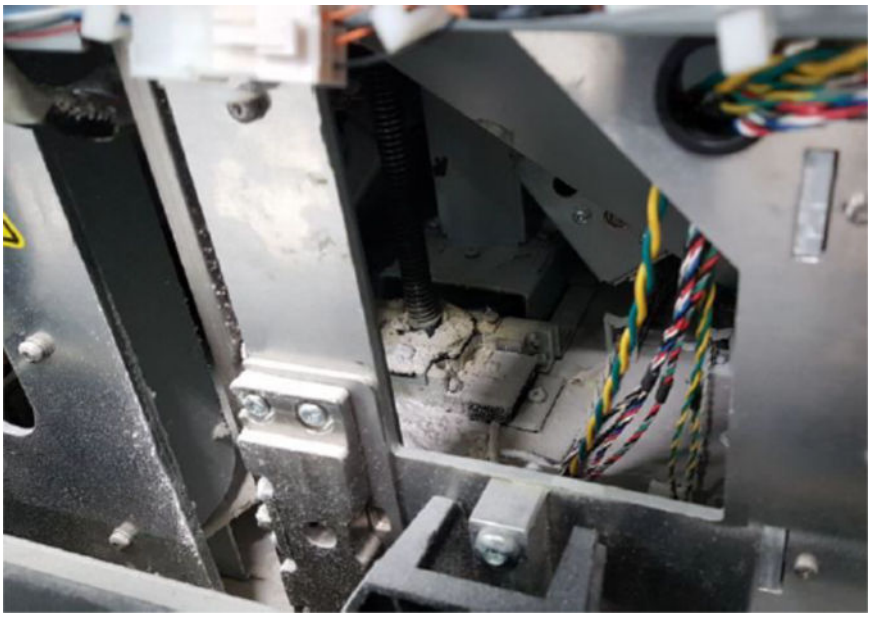

How to clean the vane transmission

1. Remove the material feeder vanes and make sure there is no material in the material feeder trays.

2. Open the vane transmission cover. To do so, remove the 3 screws in the cover with a Torx 10 screwdriver. Press the vane coupling inside the material tray in order to disengage the gears (be careful, as it can be a bit hard to disengage them at the beginning, but once the gear is free, it will fall out with the cover).

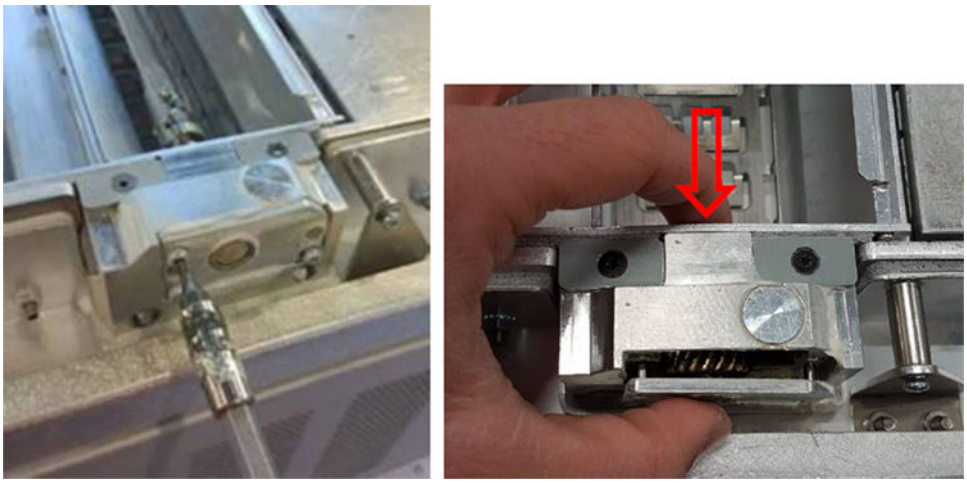

3. Remove the black mixture. You can use a tool such as a small screwdriver and an old toothbrush to clean it more easily. Clean thoroughly the gears and gearbox with a cloth.

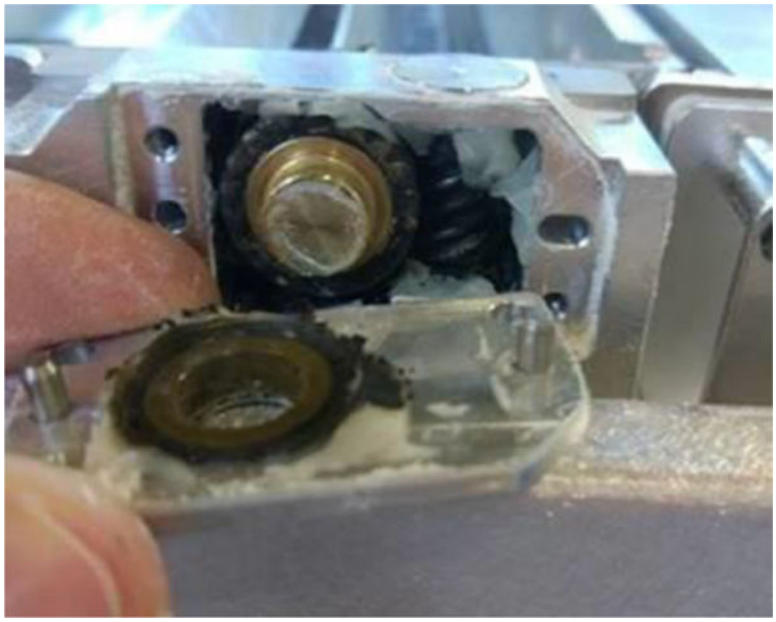

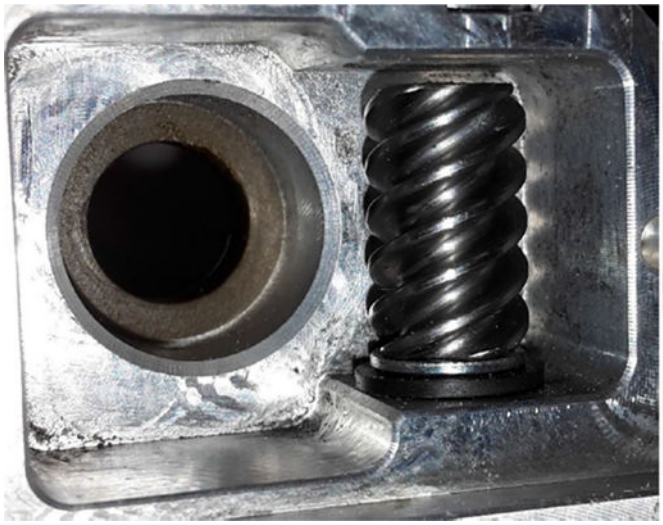

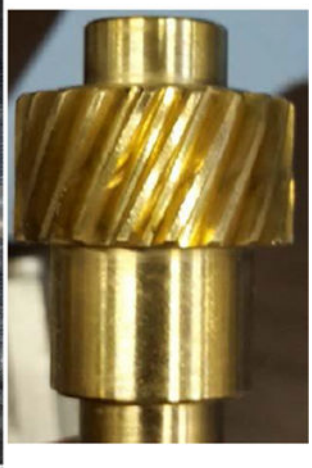

How to add grease to the transmission

For this operation you will need Molykote 44 Medium grease.

1. Start by greasing the worm wheel and gearbox. Make sure that the grease covers all the worm wheel and empty spaces inside the gearbox trying at the same time to avoid too much grease getting out of the cavity.

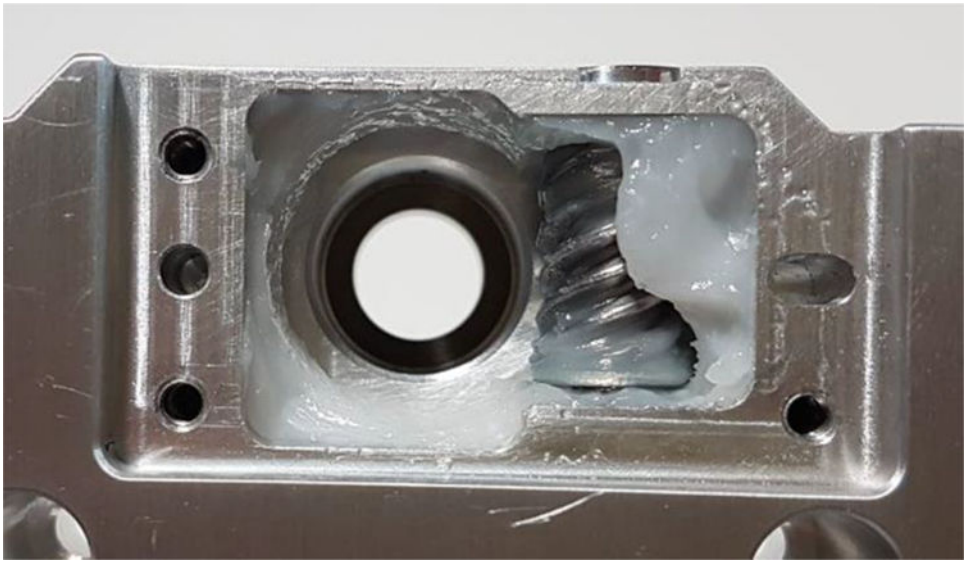

2. Then grease the bronze gear, spreading grease between all the teeth.

3. Finally, insert the greased bronze gear inside the gearbox and make sure that the whole cavity is filled with grease.

4. Install again the cover and the 3 Torx M3 screws while holding it.

⚠ WARNING! These 3 screws are quite delicate, so don't tighten them too much or they might break!

5. Reinstall the Powder Feeder Vane and run a vane calibration to make sure everything is working okay.

Cleaning the bottom area

To clean the Build Unit bottom area, please follow these steps:

1. Make sure that the bottom part of the machine looks like the picture on the right.

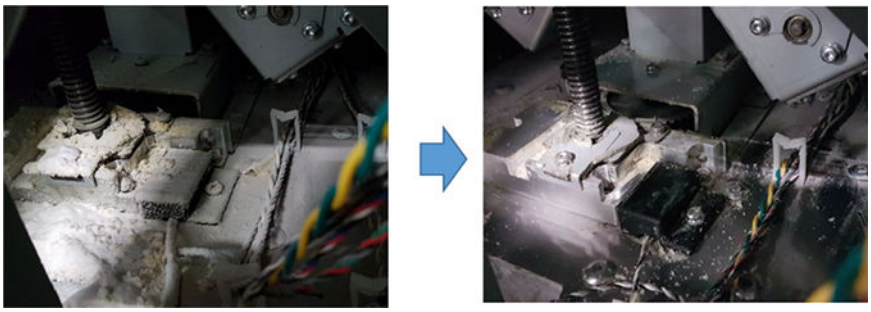

2. Take out the bottom of the Build Unit flat sump by removing the 4 screws that secure it to the rest of the bottom sump parts (2 are in the Front and 2 in the Rear area).

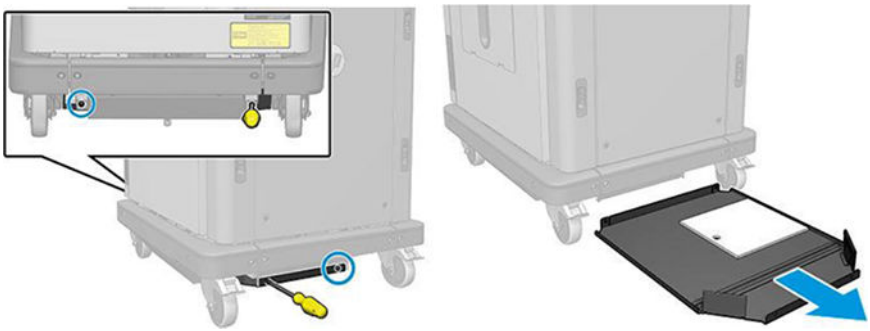

3. Empty the powder accumulated in the Bottom Flat Sump and clean it with a cloth if needed.
4. Remove the Bottom Right cover by taking out the 3 Torx T20 screws and lifting it up.

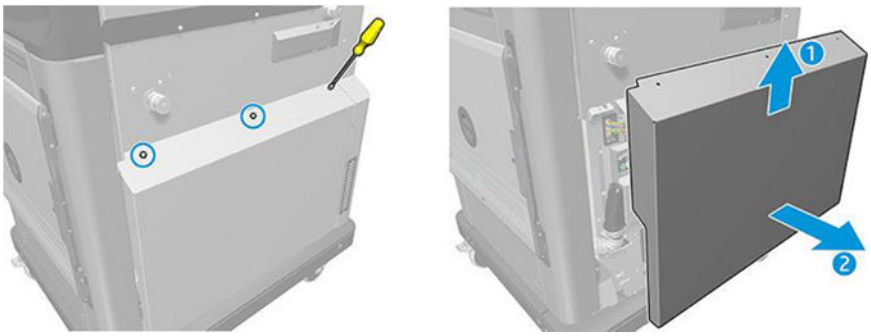

5. Use a Vacuum Cleaner to remove the powder from the Bottom area around the Leadscrew and Platform transmission.

⚠ WARNING! Be careful not to damage any cable with the Vacuum Cleaner!

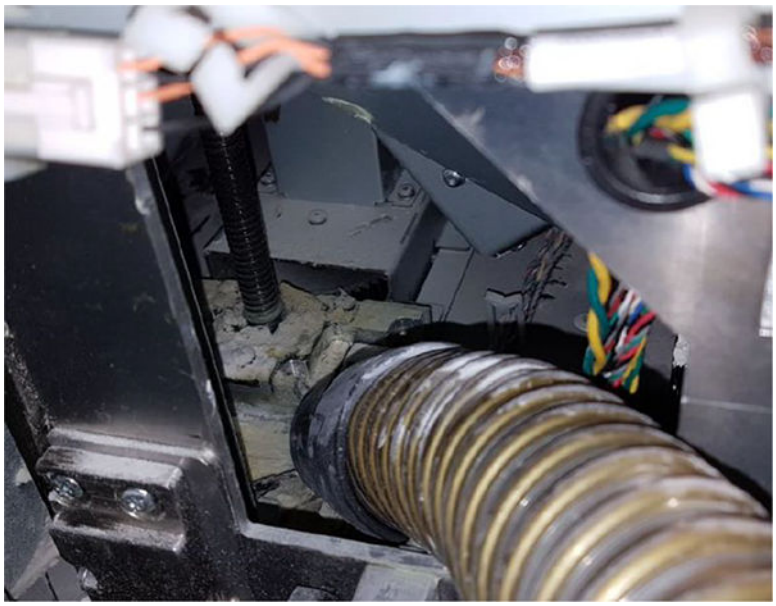

6. Finally, if needed, clean the ground surface and area around the leadscrew with a cloth to remove the mix of powder and grease that is stuck to the different surfaces.

Replace the build-unit material-chamber filters

Prepare for replacement

1. Replacement filters are provided with your printer in the printer yearly maintenance kit. Only one set of filters is needed for this operation.
2. Ensure that the printer is not printing.
3. If a job has just been printed, wait about 20 minutes for the printer to cool down.
4. You are recommended to wear gloves and mask.
5. Ensure that all windows, covers, and doors are closed and remain in their original positions.
6. Remove the build unit from the printer.

Replace the build-unit material-chamber filters

1. Locate the filters at the bottom left and right of the build chamber.

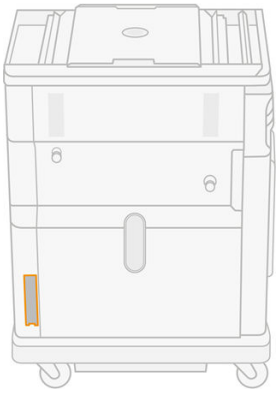

2. Pull off the filter assembly.

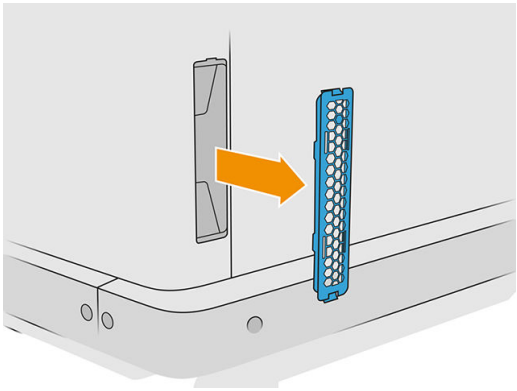

3. Separate the felt of the filter from the grid retainer and the guard.

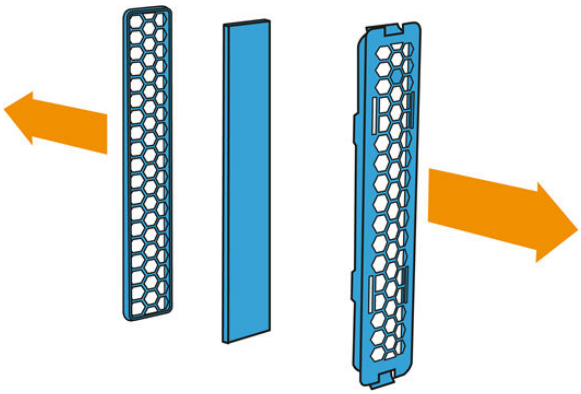

4. Dispose of the old felt according to local regulations, and carefully insert the new felt between the grid retainer and the guard.

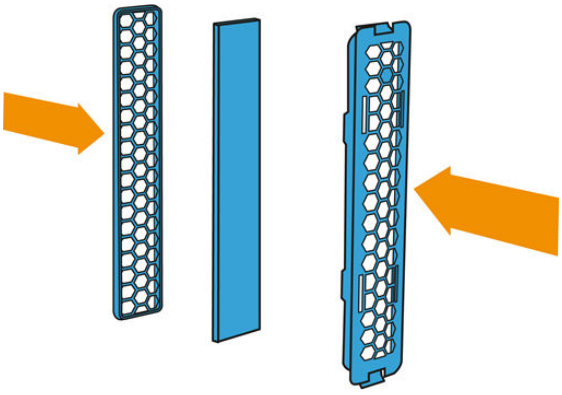

5. Put the fan filter assembly back in place.

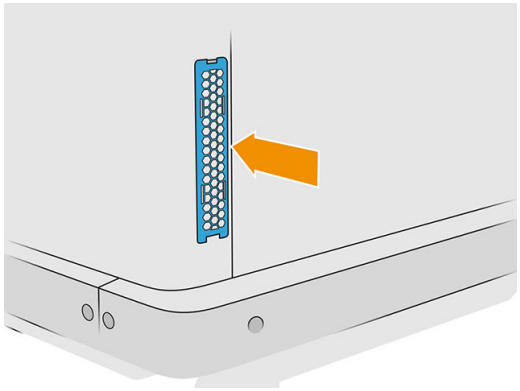

Move or store the product

IMPORTANT: If your HP Jet Fusion 3D Printing Solution needs to be moved to a different location or room, you should contact your reseller for assistance. This product has sensitive components that can be damaged during transportation: special transportation features and tools are needed.

If you need to move the processing station slightly within the same flat room, without steps or using ramps to change level, do it carefully. You may need to do this in order to perform tasks such as cleaning the working area, or small maintenance operations such as filter replacements. In this case, move it on its own wheels only over smooth, flat surfaces, within a room higher than 2.5 m (8 ft 2 in). Do not attempt to go up or down steps, and make sure there is no risk of knocking the station, which could cause serious damage. For any other movement, contact your reseller for assistance.

Do not move the printer for any purpose without service assistance. Additional packing precautions and installation calibrations are required for significant displacements of the equipment.

To store the printer, processing station, and build unit for an extended period of time (longer than a weekend), first clean each device, ensuring that there is no material left inside. See Clean the print zone, carriage, and housing structure on page 106, Clean the working area on page 189, Clean the processing station on page 196, and Clean the build unit on page 213. Material extracted must be kept within the storage conditions of the material. The equipment should be stored at a temperature of –25°C to 55°C and humidity of less than 90% (without condensation). Before using it again, allow at least 4 hours for it to acclimatize to operating conditions, and check for condensation before turning it on.

For a shorter period (one weekend), if you want to keep material inside the product, the product operating conditions must be met.

13 Print-quality optimization

- General advice
- Printhead health troubleshooting
  - Align the printheads
  - Printhead Health Gauge front-panel messages
  - Nozzle status
  - Print the printhead status plot
  - How to interpret the printhead status plot
  - Recover (clean) the printheads
  - What to do when the printheads show these defects
- Airflow check
- Fusing-lamp calibration

General advice

When you have any print-quality problem:

- To achieve the best performance from your system, use only genuine manufacturer's supplies and accessories, whose reliability and performance have been thoroughly tested to give trouble-free performance and best-quality prints.
- Check that your environmental conditions (temperature, humidity) are in the recommended range.
- Check that your material cartridges and printheads have not passed their expiration dates.
- Check that you are using the most appropriate settings for your purposes.

For the latest information, see:

- http://www.hp.com/go/jetfusion3D4200/support
- http://www.hp.com/go/jetfusion3D4210/support
- http://www.hp.com/go/jetfusion3Dprocessingstation/support

The following procedures may help to solve some print-quality issues, see specific print-quality issues for details if the issue is detected:

- Align the printheads on page 225
- Print the printhead status plot on page 231
- Recover (clean) the printheads on page 236
- Tap , then **System tools** > **Calibrations** > **Fusing lamps calibration**

Printhead health troubleshooting

Align the printheads

Printhead alignment is recommended in these situations:

- After replacing or reseating a printhead
- After a printhead crash
- When there are print-quality problems that could be caused by printhead misalignment

NOTE: If the paper is moved out of the printer by mistake during the alignment process, restart the process.

1. Go to the front panel and tap the supplies icon, then the **Printheads** tab, then **Align**.

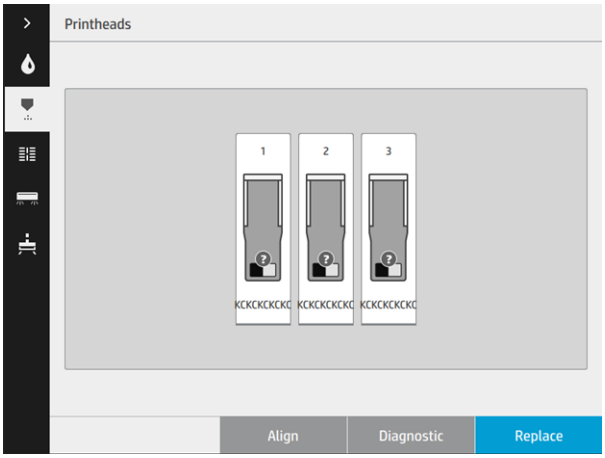

2. Open the external cleaning-roll door, take the calibration tool from inside the door, and close the door.

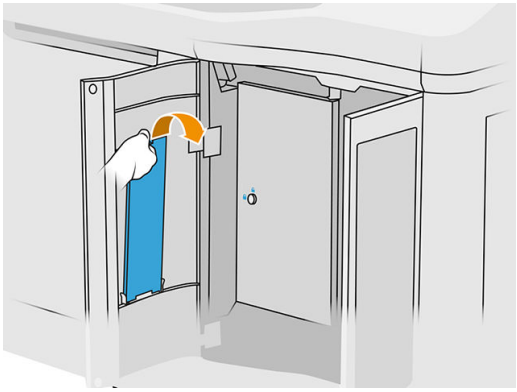

3. Open the top cover.

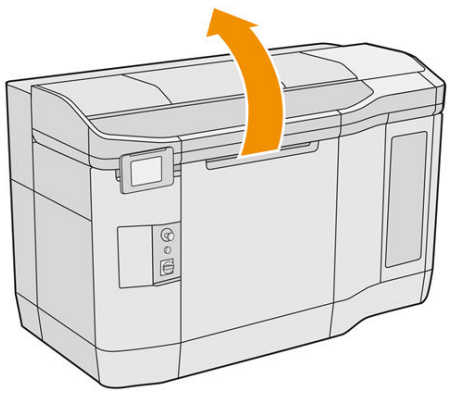

4. Insert the calibration tool between the cleaning roll and the recoating unit.

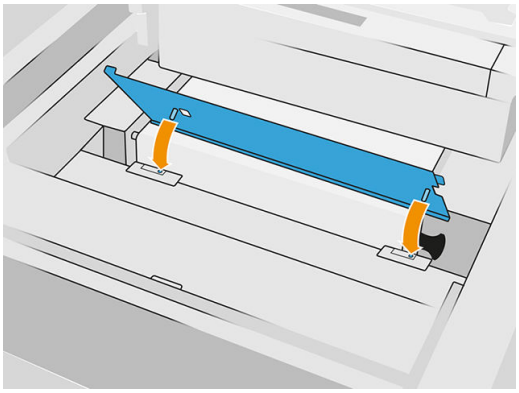

5. Take a sheet of paper of tabloid or A3 size, and cut it in half along its length. Place it in the correct position, making sure it covers the whole calibration tool. Secure the paper with clips at both sides.

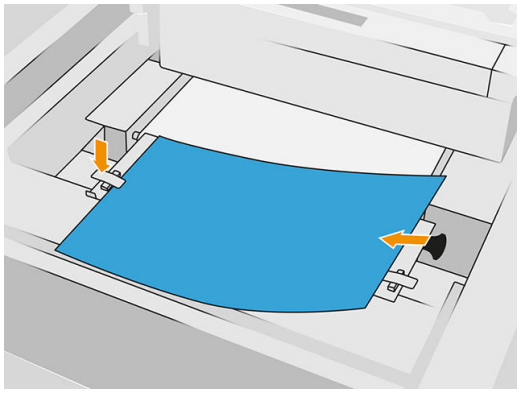

6. Close the top cover while printing the pattern. Then reopen the top cover.
7. Slide the calibration tool to position 2.

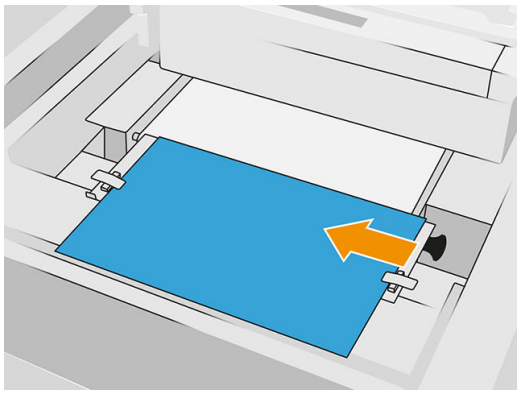

8. Close the top cover while printing the pattern. Then reopen the top cover.
9. Remove the calibration tool and store it inside the door. Check the pattern.

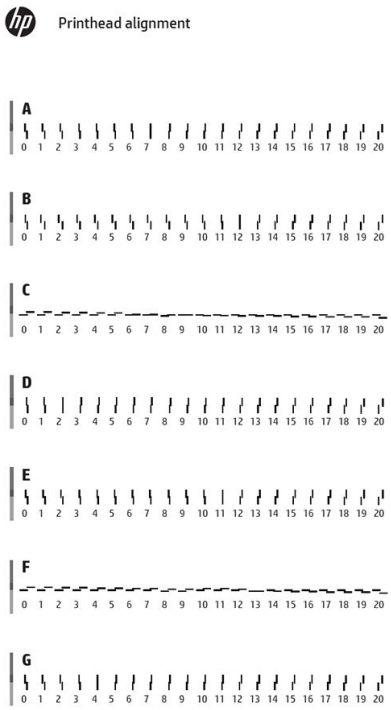

10. For every letter, choose the line that is continuous (with no break in the middle), and enter at the front panel the number next to the continuous line. If you see several lines that seem continuous, choose the middle one.

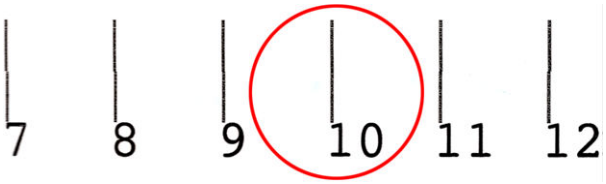

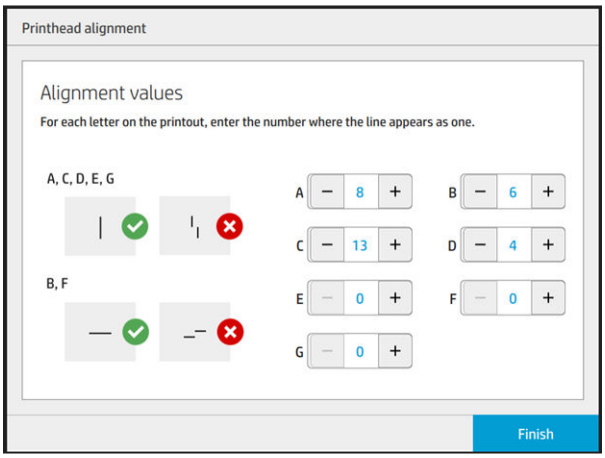

11. Check that the alignment has been done correctly by tapping **Diagnostic** in the **Printhead** tab. Place the tool covered by paper in position 1 again; and, after printing, check that the triangle is next to the continuous line in all cases. If it is, the alignment is correct.

    If there is not a continuous line above the triangle, the pattern should be fine-tuned. To do that, look for the continuous line in the pattern and add its number to the number you used before. For example, if the continous line is above −2 and the number you entered was 12, change it to 10 on the front panel and tap **Finish**.

    If all lines seem broken in a pattern, repeat the alignment.

    You are recommended to reprint the diagnostic plot until all patterns are perfectly aligned.

Printhead Health Gauge front-panel messages

Message descriptions and actions

The printhead Health Gauge is shown in several places in the front panel. For example, you can always check it on the printhead detailed information screen.

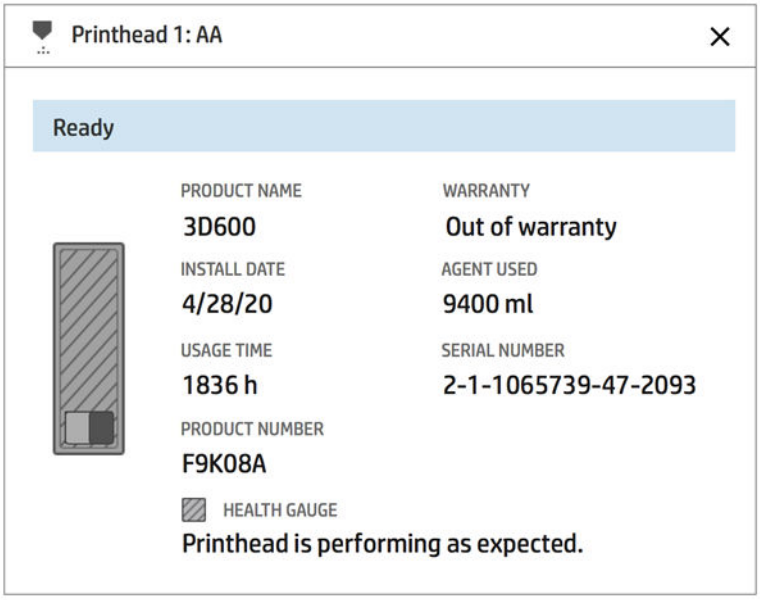

The printhead Health Gauge has three levels:

- There is no problem with the printhead nozzles.

  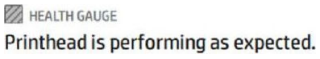

- The printhead has relatively few clogged nozzles. This is unlikely to produce any defects in the printed parts, but it could happen.

  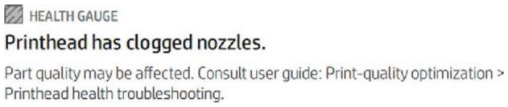

- The printhead has more clogged nozzles, which may produce defects in the printed parts.

  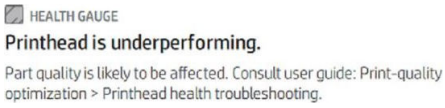

Troubleshooting

There are two main tools for investigating clogged nozzles:

- Check the nozzle status screen. See Nozzle status on page 229.
- Print the printhead status plot (for fusing-agent nozzles only). See Print the printhead status plot on page 231.

Nozzle status

To view the nozzle status, go to the front panel and tap , then **System tools** > **Drop-detector utilities** > **Show nozzle status**. The following screen appears.

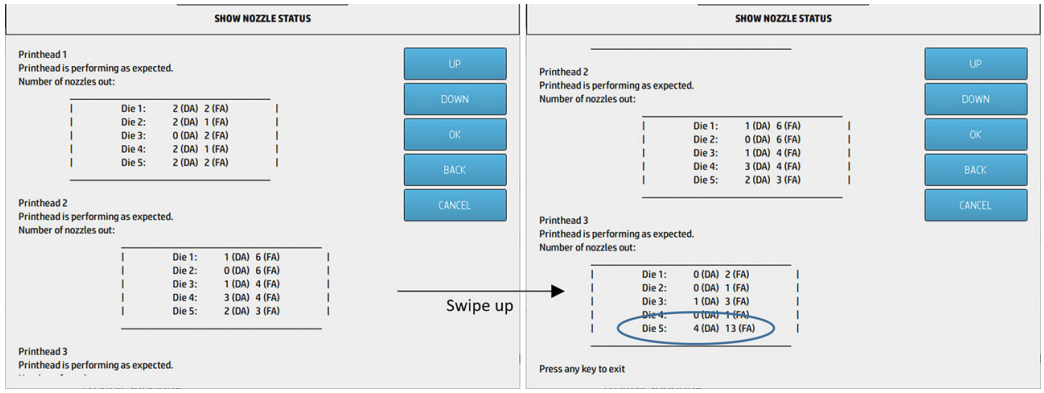

The lists show the number of clogged nozzles in each die for each agent, Detailing Agent (DA) and Fusing Agent (FA). The order is the normal order: printheads 1–2–3 from back to front of the printer and, in each printhead, dies 1–2–3–4–5 also from back to front of the printer.

For example, in the above example, the die that is closest to the front of the printer, which is Printhead 3, Die 5, has 4 clogged nozzles in the Detailing Agent and 13 clogged nozzles in the Fusing Agent (blue balloon).

How the Health Gauge relates to the number of clogged nozzles

The following table summarizes the relation between clogged nozzles and the Health Gauge.

Bear in mind that the analysis in the printer is more thorough, and takes more into account than just the number of clogged nozzles.

Clogged nozzles	Health Gauge message	Action
0–99	**Printhead is performing as expected**	None needed
100–119	Transition to **Printhead has clogged nozzles**	When convenient (between jobs), see What to do when the printheads show these defects on page 236
120–149	Probably **Printhead has clogged nozzles**	
150–169	Transition to **Printhead is underperforming**	See What to do when the printheads show these defects on page 236
170+	Probably **Printhead is underperforming**	

Any time the number of clogged nozzles in one or more dies/agents in one printhead is more than 900 (maximum is 1056), it is very unlikely that so many nozzles became clogged suddenly. Therefore, these are the possible causes:

- They could be genuine clogged nozzles after some damaging event such as, for example, the carriage crashing into the material. In this case, follow the guidelines in What to do when the printheads show these defects on page 236.
- There could be a problem with the drop-detector calibration. Tap , then **System tools** > **Calibrations** > **Drop-detector calibration**.
- There could be a connection problem in the affected printhead. Try reseating the affected printhead, see Replace a printhead on page 42 (after removing the printhead, you can reinsert the same printhead).

After these actions, run a printhead recovery 1 routine to force a health status update. See Recover (clean) the printheads on page 236.

If all else fails, replace the printhead with a new one. If that also fails, contact your service representative.

Print the printhead status plot

You can use the printhead status plot to assess printhead nozzle health.

1. At the front panel, tap , then **Part quality troubleshooting** > **Printhead status plot**.
2. Open the external cleaning-roll door, take the calibration tool from inside the door, and close the door.

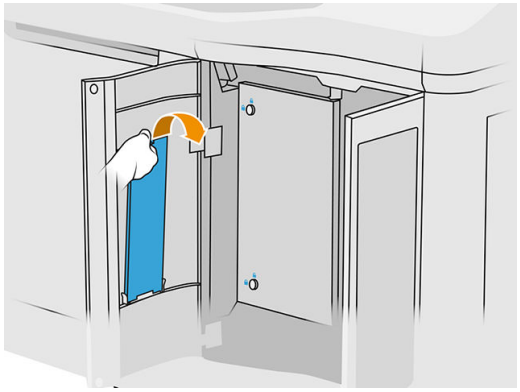

3. Open the top cover.

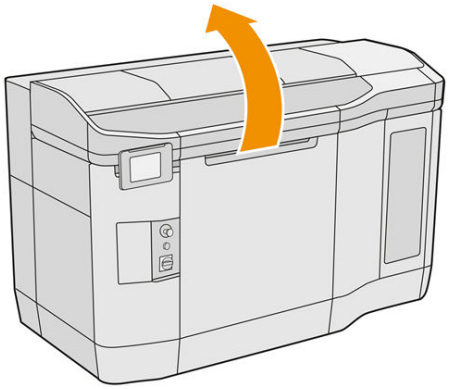

4. Insert the calibration tool between the cleaning roll and the recoating unit in either of the two positions.

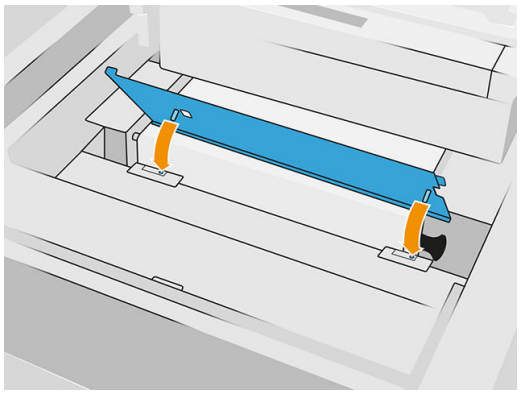

5. Place a tabloid or A3 sheet of blank paper on the calibration tool.

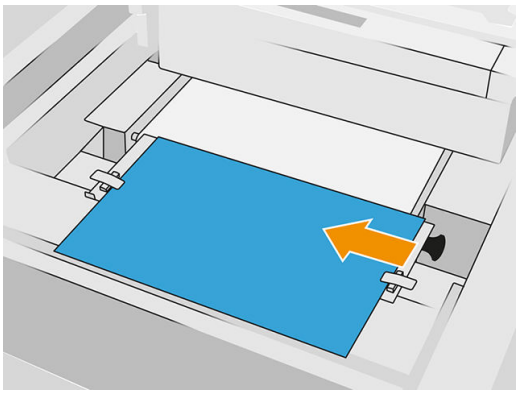

6. Close the top cover.
7. Tap **Next** on the front panel.
8. Remove the calibration tool and put it back inside the cleaning-roll door.

The following image is printed:

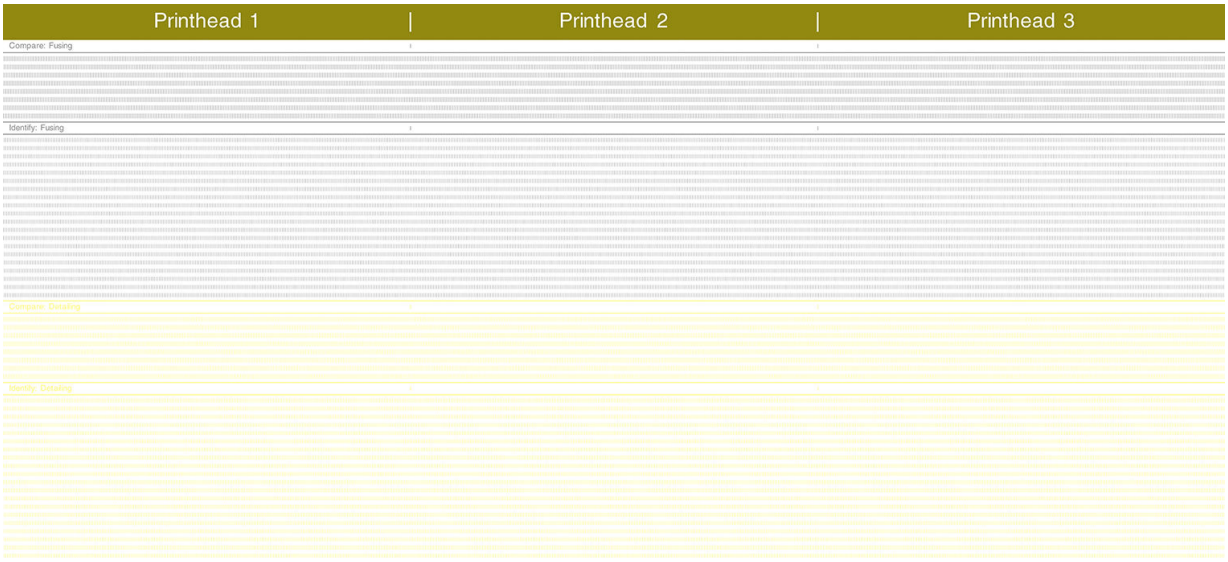

NOTE: The detailing agent, shown in yellow in the above image, is not normally visible. However, it may sometimes appear partially in a very light shade of gray.

How to interpret the printhead status plot

Use a 10× magnifier to look at the plot. There are patterns corresponding to each of the printheads, Printhead 1, Printhead 2, and Printhead 3.

Each of these has two sections: Compare and Identify.

Compare: Fusing

This section shows isolated (or individual) nozzles. You can use it to assess by inspection the percentage of random nozzles out in an area of a printhead.

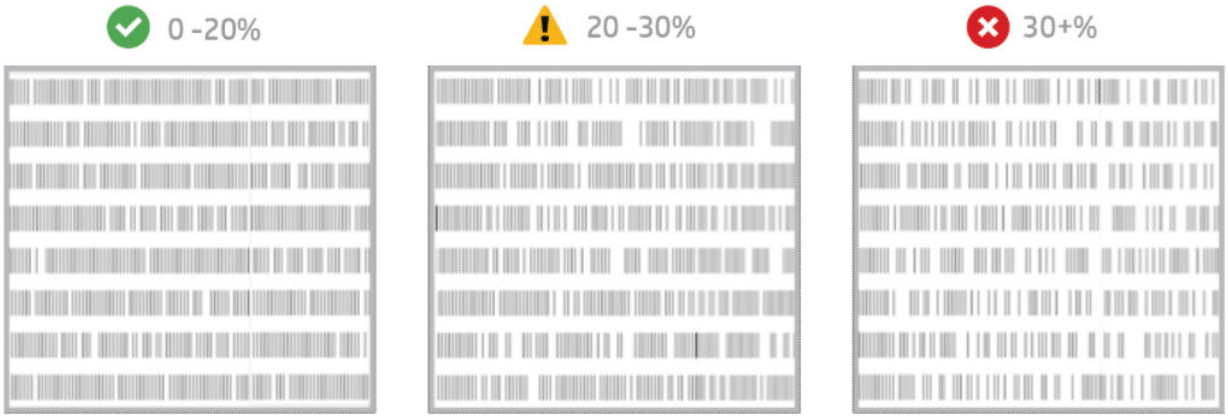

Random nozzles out have a much lower impact on mechanical properties than consecutive nozzles out.

It is not easy to estimate the percentage of nozzles out visually; therefore some aids are provided in the table below.

Nozzles out	Effect on mechanical properties	View
10%	No risk of defects	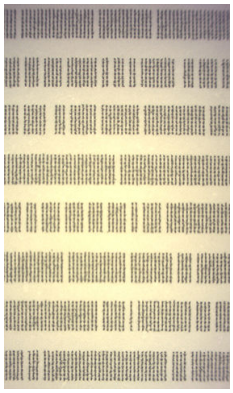
15%	No risk of defects	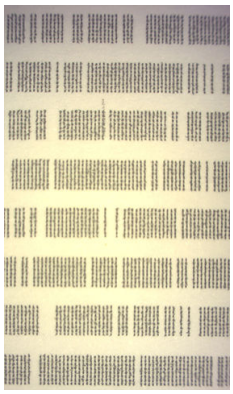

Nozzles out	Effect on mechanical properties	View
20%	Low risk of defects	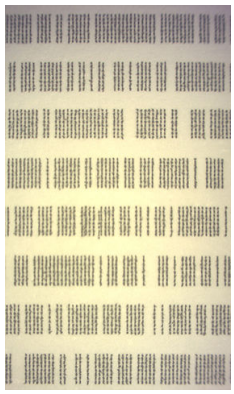
25%	Low risk of defects	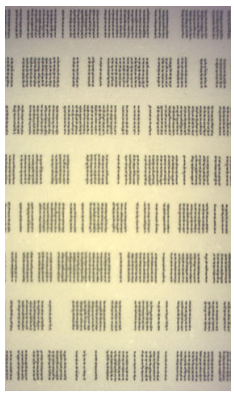
30%	High risk of defects	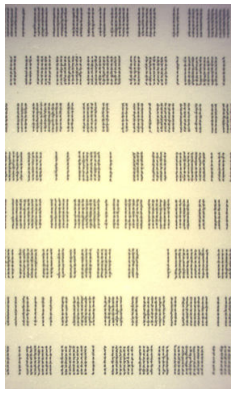
40%	High risk of defects	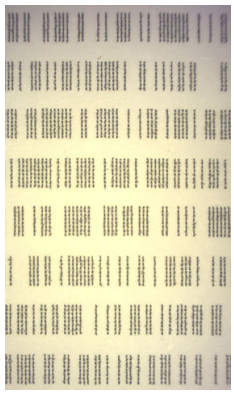

Identify: Fusing

This section shows small groups of consecutive nozzles. A group of more than a certain number of consecutive nozzles out can produce a flaw in the part.

This type of flaw in a fusing agent can produce bad mechanical properties. If there are a number of consecutive fusing-agent nozzles out, covering 1 mm or more (for example), the parts printed in that area will come out of the build unit severely damaged or even split in two.

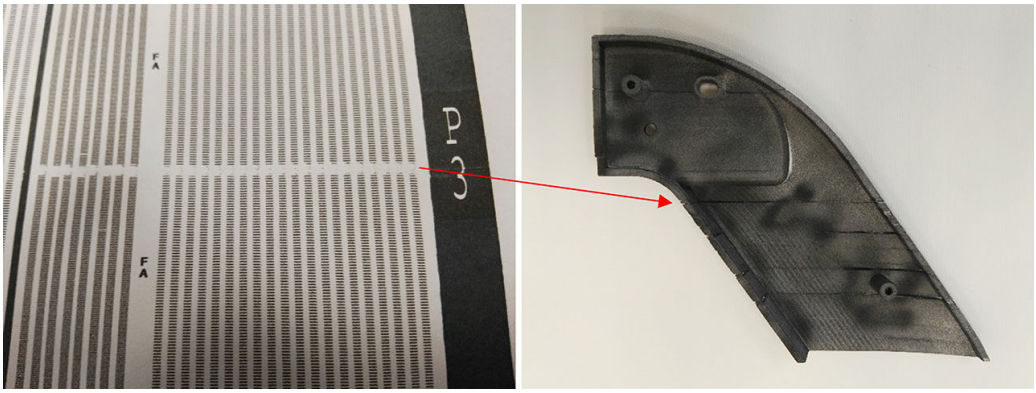

You are more likely to see a small number of consecutive nozzles out. The identify pattern allows you to check in which areas there could be a problem and decide whether the number of consecutive missing nozzles could produce defects. The table below summarizes the impact.

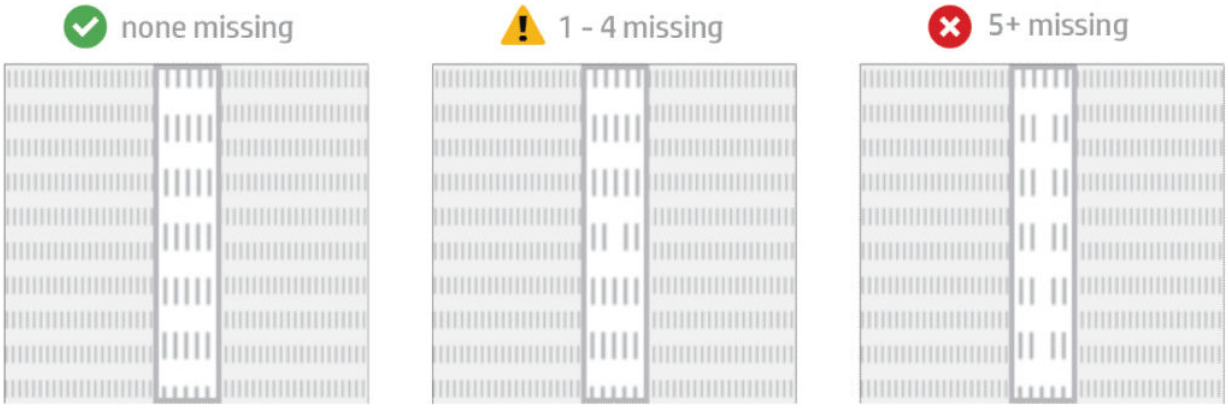

	Low risk of impact on mechanical properties: 1 to 4 sequential groups missing (1 shown)	High risk of impact on mechanical properties: 5 or more sequential groups missing (5 shown)
	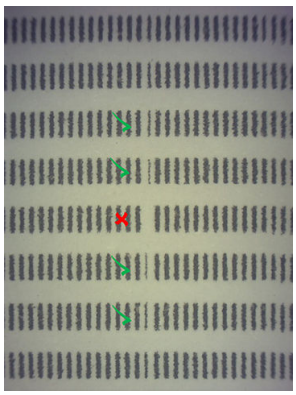	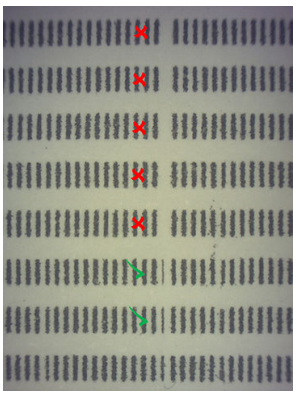

Recover (clean) the printheads

The printer can try to recover the use of a malfunctioning printhead by cleaning it. At the front panel, tap , then **Part quality troubleshooting** > **Printhead recovery 1**. If the initial recovery is not completely successful, you can try **Printhead recovery 2**.

What to do when the printheads show these defects

1. **Try to recover the affected printhead(s).**

   See Recover (clean) the printheads on page 236. Start with the recovery 1 operation, then reprint the printhead status plot to check the effect. If you are still seeing defective nozzles, try the recovery 2 operation.

2. **Rearrange the parts.**

   If possible, this is sometimes very straightforward. Simply move the parts of the next job to positions in the print bed that will not be affected by the defective nozzles.

   An example is shown below. The yellow lines represent areas with possible defects; the red lines represent areas with probable defects; the blue ellipses enclose parts affected by the defective nozzles. On the left, a number of parts are affected by yellow and red lines; on the right, the parts have been rearranged so that only one part is affected by a yellow line.

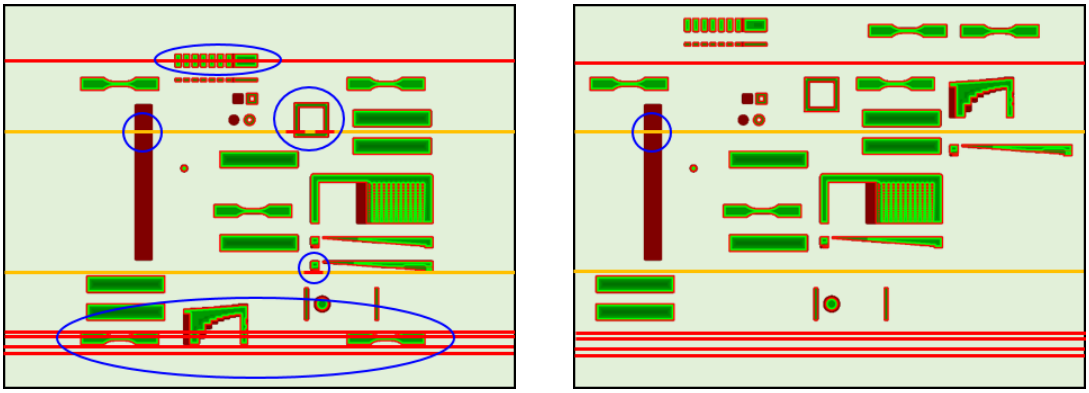

   For reference, the location of each printhead and die with respect to the bed is shown below.

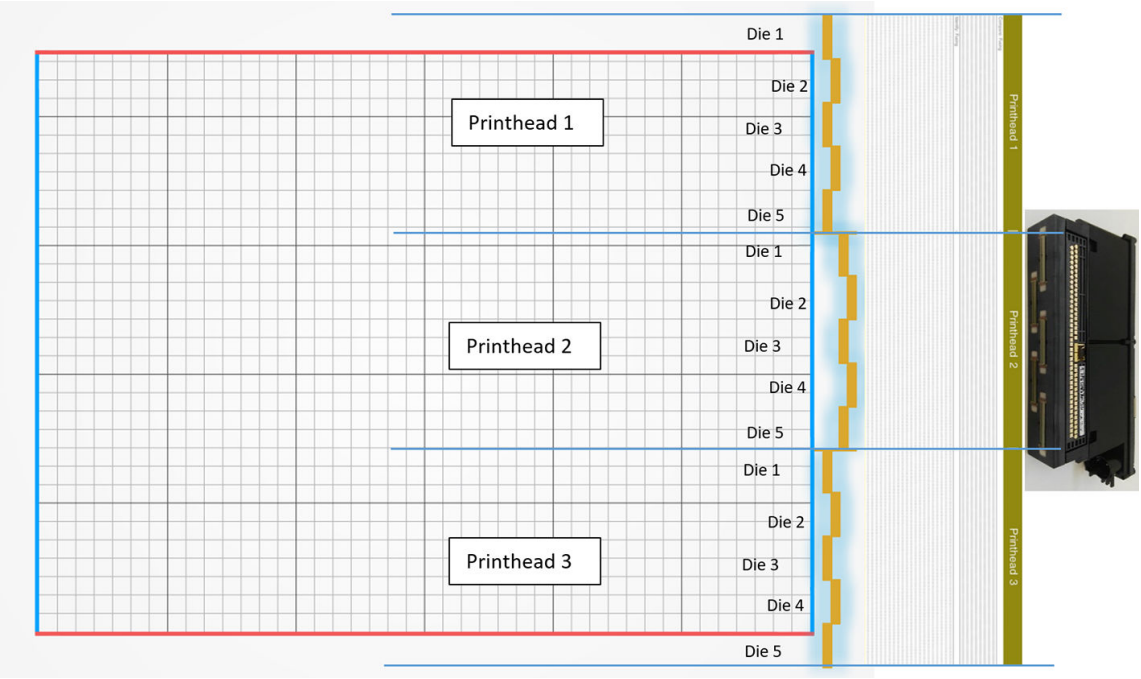

3. **Replace the affected printhead(s).**

   If the printhead recovery is not sufficiently effective, you can choose to replace a malfunctioning printhead with a new one.

Airflow check

For optimal printer performance, the ambient temperature should be maintained within the specified range (see the site preparation guide), and the airflow into and out of the printer should be unimpeded.

- Make sure that the print-zone inlet (behind the printer) is not blocked by any obstruction.
- Make sure that the fans on top of the printer are not blocked by any obstruction.

Fusing-lamp calibration

The purpose of this calibration is to check that the lamps are operating within specifications.

Calibration should be done in the following circumstances:

- After any fusing-lamp replacement
- When requested by the front panel

The printer and its material should be at ambient temperature before running a fusing-lamp calibration. If a job has just finished, at least 1 hour of cooling will be needed with the top cover open, or 2 hours with the top cover closed. If you try to start the calibration when the printer has not cooled down sufficiently, the front panel will warn you.

To start the calibration, go to the front panel and tap , then **Maintenance** > **Calibrate fusing lamps**.

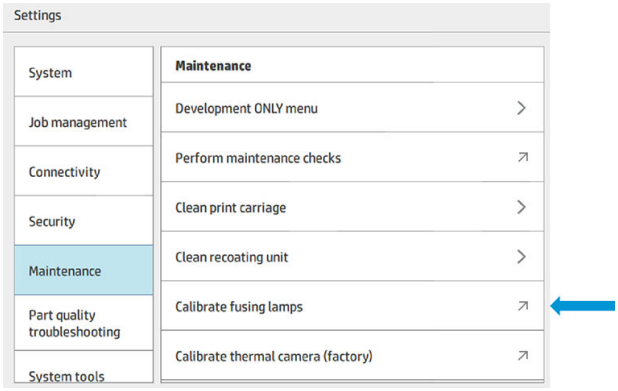

The front panel displays the printer's estimate of the relative humidity, which you should normally accept; but you can modify it in the following cases:

- You have a calibrated humidity sensor (better than the printer's built-in sensor).
- The printer's built-in sensor cannot produce a reading outside the range 10–90%. If it reads 10% or 90%, it may be faulty. Furthermore, if the relative humidity really is outside the range 10–90%, the printer is being used outside its specified operating conditions.
- If the relative humidity is 60%, the correction for humidity is zero. So you can enter a figure of 60% if you want no correction for humidity.

The calibration returns one of the following statuses:

- VALID – The calibration has been performed correctly.
- WARNING – You can print, but there is a risk of insufficient power if you use a fast print profile.
- INVALID – You cannot print, because there is not enough power to print with a balanced print profile.
- ERROR – The calibration failed to complete, so there is no result.
  - If it fails during the layering process, there is a problem with the layering system. Retry or try with another build unit to confirm.
  - If it fails in the processing of data, this is usually a problem in processing internal information, and will usually disappear after restarting the printer.

Scaling factors are displayed for the left and right lamps, which should be in the range 0.9–1.1.

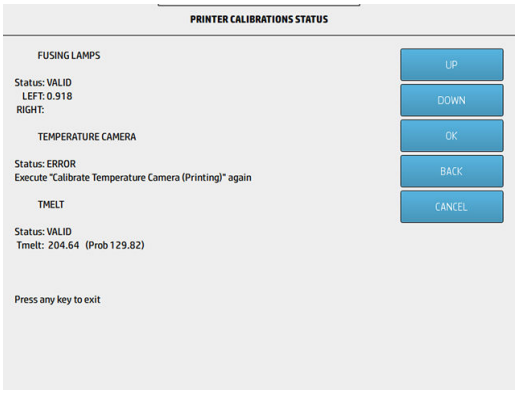

You can check the calibration status at any time by tapping , then Maintenance > Show calibrations.

If you need to report the situation to your support representative, you can download files by tapping , then Maintenance > Download calibrations support.

14 Ordering information

This chapter lists the available supplies and accessories, and their part numbers, at the time of writing.

Contact your support representative and check that what you want is available in your area and for your model.

Part number	Name
M0P45A	HP Jet Fusion 3D Build Unit
F9K08A	HP 3D600 Printhead
V1Q77A	HP 3D710 Printhead (only for 4210)
V1Q60A	HP 3D600 3-liter Fusing Agent
V1Q63A	HP 3D700 5L Fusing Agent
V1Q78A	HP 3D710 5L Fusing Agent (only for 4210)
V1Q61A	HP 3D600 3-liter Detailing Agent
V1Q64A	HP 3D700 5L Detailing Agent
V1Q79A	HP 3D710 5L Detailing Agent (only for 4210)
V1Q66A	HP 3D600 Cleaning Roll
V1R20A	HP 3D HR PA 12 1400 L / 600 Kg
V1R23A	HP 3D HR PA 12 GB 1400 L / 700 Kg

15 System errors

- Introduction
- 0085-0008-0X94 Carriage – Printhead – Temperature extremely high
- 0085-0008-0X86 Carriage – Printhead – Temperature too high
- 0085-0008-0X95 Carriage – Printhead – Temperature extremely low
- 0085-0008-0X87 Carriage – Printhead – Temperature too low
- 0085-0008-0X82 Carriage – Printhead – Data not responding
- 0085-0008-0X98 Carriage – Printhead – Transmit error
- 0085-0008-0X96 Carriage – Printhead – Energy calibration failure
- 0085-0008-0X93 Carriage – Printhead – Fails continuity
- 0085-0008-0X85 Carriage – Printhead – Fails logical
- 0085-0008-0X10 Carriage – Printhead – Voltage out of range
- 0085-0013-0X01 Carriage – Primer – Malfunction
- 0085-0013-0X33 Carriage – Primer – Current too high
- 0085-0013-0X41 Carriage – Primer – Leakage

Introduction

The system may occasionally display a system error, consisting of a numerical code of 12 digits followed by the recommended action that you should take.

In most cases you will be asked to restart the equipment. When the printer or processing station starts, it can diagnose the issue better and may be able to fix it automatically. If the problem persists after restarting, contact your support representative and be ready to give the numerical code from the error message.

Instructions for some specific messages are given below. In other cases, follow the instructions in the message.

In every error code, the printheads are numbered as shown below:

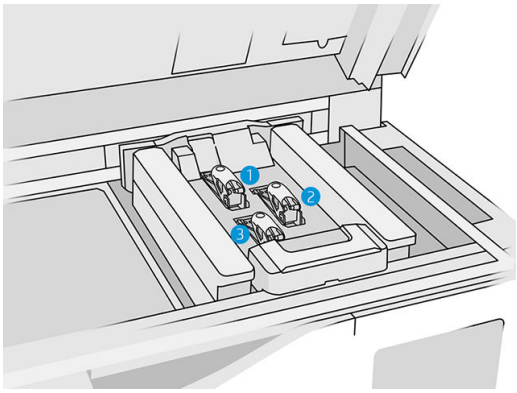

1. Rear printhead
2. Middle printhead
3. Front printhead

0085-0008-0X94 Carriage – Printhead – Temperature extremely high

(0085-0008-0194, 0085-0008-0294, 0085-0008-0394)

Where X is the number of the printhead.

1. Remove the printhead and weigh it. If it weighs less than 255 g, replace it: see Replace a printhead on page 42. If the weight is correct, continue with the following steps.
2. Clean the printhead contacts: see Clean the printhead contacts on page 136.
3. If the problem persists, swap the printhead with another to check whether the problem moves to the new location of the original printhead. If this is the case, replace the printhead: see Replace a printhead on page 42.
4. Look in the software for job sections that are too dense, and try to change the orientation. Start with a small area to fuse and also finish with a small area to print/fuse, if you are faced with abraded tops or sinks. This can easily be achieved by rotating the part at a certain angle: HP recommends rotating the part more than 20 degrees to minimize stair-stepping.

0085-0008-0X86 Carriage – Printhead – Temperature too high

(0085-0008-0186, 0085-0008-0286, 0085-0008-0386)

Where X is the number of the printhead.

1. Remove the printhead and weigh it. If it weighs less than 255 g, replace it: see Replace a printhead on page 42. If the weight is correct, continue with the following steps.
2. Look in the software for job sections that are too dense, and try to change the orientation.

0085-0008-0X95 Carriage – Printhead – Temperature extremely low

(0085-0008-0195, 0085-0008-0295, 0085-0008-0395)

Where X is the number of the printhead.

1. Remove the printhead and weigh it. If it weighs less than 255 g, replace it: see Replace a printhead on page 42. If the weight is correct, continue with the following steps.
2. Clean the printhead contacts: see Clean the printhead contacts on page 136.
3. If the problem persists, swap the printhead with another to check whether the problem moves to the new location of the original printhead. If this is the case, replace the printhead: see Replace a printhead on page 42.

0085-0008-0X87 Carriage – Printhead – Temperature too low

(0085-0008-0187, 0085-0008-0287, 0085-0008-0387)

Where X is the number of the printhead.

1. Remove the printhead and weigh it. If it weighs less than 255 g, replace it: see Replace a printhead on page 42. If the weight is correct, continue with the following steps.
2. Clean the printhead contacts: see Clean the printhead contacts on page 136.
3. If the problem persists, swap the printhead with another to check whether the problem moves to the new location of the original printhead. If this is the case, replace the printhead: see Replace a printhead on page 42.

0085-0008-0X82 Carriage – Printhead – Data not responding

(0085-0008-0182, 0085-0008-0282, 0085-0008-0382)

Where X is the number of the printhead.

1. Remove the printhead and weigh it. If it weighs less than 255 g, replace it: see Replace a printhead on page 42. If the weight is correct, continue with the following steps.
2. Clean the printhead contacts: see Clean the printhead contacts on page 136.
3. If the problem persists, swap the printhead with another to check whether the problem moves to the new location of the original printhead. If this is the case, replace the printhead: see Replace a printhead on page 42.

0085-0008-0X98 Carriage – Printhead – Transmit error

(0085-0008-0198, 0085-0008-0298, 0085-0008-0398)

Where X is the number of the printhead.

1. Remove the printhead and weigh it. If it weighs less than 255 g, replace it: see Replace a printhead on page 42. If the weight is correct, continue with the following steps.
2. Clean the printhead contacts: see Clean the printhead contacts on page 136.
3. If the problem persists, swap the printhead with another to check whether the problem moves to the new location of the original printhead. If this is the case, replace the printhead: see Replace a printhead on page 42.

0085-0008-0X96 Carriage – Printhead – Energy calibration failure

(0085-0008-0196, 0085-0008-0296, 0085-0008-0396)

Where X is the number of the printhead.

1. Remove the printhead and weigh it. If it weighs less than 255 g, replace it: see Replace a printhead on page 42. If the weight is correct, continue with the following steps.
2. Clean the printhead contacts: see Clean the printhead contacts on page 136.
3. If the problem persists, swap the printhead with another to check whether the problem moves to the new location of the original printhead. If this is the case, replace the printhead: see Replace a printhead on page 42.

0085-0008-0X93 Carriage – Printhead – Fails continuity

(0085-0008-0193, 0085-0008-0293, 0085-0008-0393)

Where X is the number of the printhead.

1. Remove the printhead and weigh it. If it weighs less than 255 g, replace it: see Replace a printhead on page 42. If the weight is correct, continue with the following steps.
2. Clean the printhead contacts: see Clean the printhead contacts on page 136.
3. If the problem persists, swap the printhead with another to check whether the problem moves to the new location of the original printhead. If this is the case, replace the printhead: see Replace a printhead on page 42.

0085-0008-0X85 Carriage – Printhead – Fails logical

(0085-0008-0185, 0085-0008-0285, 0085-0008-0385)

Where X is the number of the printhead.

1. Remove the printhead and weigh it. If it weighs less than 255 g, replace it: see Replace a printhead on page 42. If the weight is correct, continue with the following steps.
2. Clean the printhead contacts: see Clean the printhead contacts on page 136.
3. If the problem persists, swap the printhead with another to check whether the problem moves to the new location of the original printhead. If this is the case, replace the printhead: see Replace a printhead on page 42.

0085-0008-0X10 Carriage – Printhead – Voltage out of range

(0085-0008-0110, 0085-0008-0210, 0085-0008-0310)

Where X is the number of the printhead.

1. Remove the printhead and weigh it. If it weighs less than 255 g, replace it: see Replace a printhead on page 42. If the weight is correct, continue with the following steps.
2. Clean the printhead contacts: see Clean the printhead contacts on page 136.
3. If the problem persists, swap the printhead with another to check whether the problem moves to the new location of the original printhead. If this is the case, replace the printhead: see Replace a printhead on page 42.

0085-0013-0X01 Carriage – Primer – Malfunction

Where X is:

1. Primer on Printhead 1
2. Primer on Printhead 2
3. Primer on Printhead 3

The primer is wrongly connected or its cable is broken. Just disconnect the primer cable and reconnect it. See Replace a primer on page 151, step 1 to disconnect the primer cable and step 4 to reconnect it.

If the problem persists after fixing the connection, it is also possible that the primer itself is broken. In this case, replace the corresponding primer. See Replace a primer on page 151.

0085-0013-0X33 Carriage – Primer – Current too high

Where X is:

1. Primer on Printhead 1
2. Primer on Printhead 2
3. Primer on Printhead 3

The primer is broken. Replace the corresponding primer. See Replace a primer on page 151.

0085-0013-0X41 Carriage – Primer – Leakage

Where X is:

1. Primer on Printhead 1
2. Primer on Printhead 2
3. Primer on Printhead 3

There is a leak in the primer air circuit. The most probable cause is that the primer ports were wrongly inserted when latching the printhead. Re-latch the corresponding printhead.

The primer ports are two small air ports below the latch that must fit into the two top printhead holes.

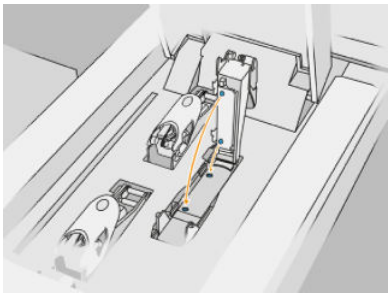

See Replace a printhead on page 42, steps 5 and 6 to release and lift the latch, step 12 and 13 to ensure primer ports are well inserted, and step 14 to close it.

IMPORTANT: Just lift the latch and close it; do not extract the printhead.

If the problem persists after re-latching the printhead, it is also possible that the primer ports are broken or the primer circuit itself leaks. In this case, replace the corresponding primer. See Replace a primer on page 151.

English

16 When you need help

Request support

Support is provided by your support representative: usually from the company from which you bought the printer. If this is not the case, contact HP Support on the Web:

- http://www.hp.com/go/jetfusion3D4200/support, or
- http://www.hp.com/go/jetfusion3D4210/support, or
- http://www.hp.com/go/jetfusion3Dprocessingstation/support

Before calling your support representative, prepare for the call as follows:

- Review the troubleshooting suggestions in this guide.
- Review your software documentation, if relevant.
- Check that you have the following information ready:
  - The product and serial numbers of the printer you are using.
  - If there is an error code on the front panel, make a note of it. See System errors on page 240.
  - The name and version number of your software.
  - If you have a print-quality problem, the name and product number of the paper, and the name and origin of the paper preset that you used to print on it.

Customer Self-Repair

HP's Customer Self-Repair program offers our customers the fastest service under either warranty or contract. It enables HP to ship replacement parts directly to you (the end user) so that you can replace them. Using this program, you can replace parts at your own convenience.

Convenient and easy to use

- Your support representative will diagnose and assess whether a replacement part is required to address a defective hardware component.

For more information about Customer Self Repair, see http://www.hp.com/go/selfrepair/.

Service information

The Command Center can produce on request a list of many aspects of the printer's current status, some of which may be useful to a service engineer trying to fix a problem.

17 Accessibility

Front panel

If required, the front-panel display brightness and the loudspeaker volume can be changed (see Change system options on page 24).

English

Index

A
administrator password 25
agents 38
  replace 39
  troubleshoot 41
air conditioning 12
airflow check 237
alerts 23

B
beacon 24
Build Manager 30
build-unit components 21
build-unit maintenance 208

C
cartridges 50
  maintain 62
  replace 51
  store 62
  troubleshoot 61
cautions 13
circuit-breaker labels 34
cleaning 92
Command Center 25
cooling time 5
CSR 246
customer self-repair 246

D
documentation 2

E
emergency stop buttons 16
errors, system 240
external tank 62

F
file preparation 66
firmware update 28
front panel 22
front panel option
  display brightness 24
  speaker volume 24
  unit selection 24
front-panel options
  date and time options 24
  restore factory settings 24
fusing-lamp calibration 237

H
help 246
hostname 35

J
job
  add while printing 82
  cancel 83
  check status 84
  create 66
  errors 84
  file preparation 66
  select 82
  send 82
  status 82

L
labels
  circuit breakers 34
  warning 13

M
maintenance 93
  build unit 208
  kits 94
  printer 101
  processing station 187
  tools 98
manuals 2
material 50
  load into build unit 71
MJF technology 3
Multi Jet Fusion 3

N
network troubleshooting 36
networking 35

O
options, system 24
order supplies 239

P
part
  clean 92
  postprocess 92
  specifications 70
  troubleshoot 225
part numbers 239
password
  administrator 25
postprocessing 92
print modes 85
printer components 18
printer maintenance 101
printer on/off 32
printhead cleaning roll 45
  replace 46
printheads 41
  align 225
  clean 236
  Health Gauge messages 228
  recover 236
  replace 42
  status plot 231
printing 81
printing process outline 4
printing time 5
processing station on/off 33
processing-station components 19
processing-station maintenance 187
product usage requirements 3

R
recycle supplies 64
Rhinoceros settings 67

S
safety labels 13

safety precautions 6
service information 246
SmartStream 3D
Build Manager 30
Command Center 25
software 25
Solid Designer settings 66
SolidWorks settings 67
status center 23
STL file repairs 68
STL problems 67
storage tank 62
support 246
system options 24

T

tank 62
tesselation 66
time, cooling 5
time, printing 5
tools 13

U

unpacking 86

V

ventilation 11

W

warning labels 13
warnings 13

English